SANYO DENKI

SERVO SYSTEMS

SANMOTION R 3E Model

400 VAC 550 W-55 kW

AC servo systems

Ver.4.1

English





SANMOTION R

SERVO SYSTEMS

3E Model

Input voltage 400 VAC

Output capacity 550 W to 55 kW

Servo amplifier



Amplifier capacity 25, 50, 100, 150, 300, 800 A

Servo motor



Flange size 100 mm sq., 130 mm sq., 180 mm sq.,
220 mm sq., 275 mm sq., 320 mm sq.



Rated output 550 W to 55 kW



Contents

Lineup ..... p. 5

Features ..... p. 7

List of Compatible Servo Amplifiers and Servo Motors ..... p. 13

Standard Model Number List ..... p. 14

Servo amplifiers

R 3E Model Analog/Pulse Input Type ..... p. 19

EtherCAT Interface Type ..... p. 37

Built-In Positioning Function Type ..... p. 51

Functional Safety Models ..... p. 76

Servo motors ..... p. 81

Specifications - Servo Amplifiers + R2 Servo Motors (Medium Inertia) ..... p. 82

R1 Servo Motors (Low Inertia) ..... p. 88

Servo Motor Dimensions ..... p. 92

Options ..... p. 99

Selection Guide ..... p. 120

Motor Protection Rating ..... p. 123

Safety Precautions ..... p. 124

High Performance AC Servo Systems

SANMOTION R
AC SERVO SYSTEMS

The SANMOTION R series servo systems evolve your devices with a wide variety of high-precision servo amplifiers and servo motors.
Highly precise and highly reliable systems with a product line that includes products with high capacities.



Input device / controller

SANMOTION C Motion Controller

EtherCAT



See the SANMOTION C catalog for details.

SANMOTION R servo systems

Servo Amplifier

SANMOTION R 3E Model

Analog/Pulse	EtherCAT	Built-in Positioning Function
Safety Function	Safety Function	Safety Function
		

Servo Motor (Rotary)



Application examples

Its high-precision and accurate positioning features allow it to be used in a wide range of applications.

- Injection molding machines, machine tools, machining centers, semiconductor related equipment, water jet cutters, laser beam machines, and the like.

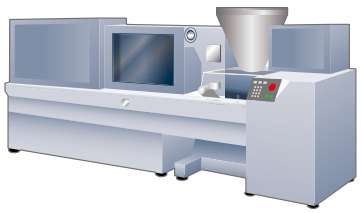

Injection molding machines



Machine tools

What is a servo system?

A servo system has an encoder (position and rotation detector) mounted on the servo motor and provides highly-reliable precise operation by giving feedback to commands from the servo amplifier. It can be used with confidence in applications that require high-speed and large-capacity operations.

The products featured in this catalog are designed to operate with a 400 VAC main circuit power supply.
We also have servo systems for 100 to 200 VAC and 48 VDC inputs available. Refer to our website and catalogs for details.

Lineup

Servo Amplifier

SANMOTION R 3E Model

Analog/Pulse Input Type → p. 19

This is a high-responsiveness AC servo amplifier that pursues evolved performance, energy efficiency, and ease of use.

Lineup: 25, 50, 100, 150, 300, 800 A



EtherCAT Interface Type → p. 37

With a 62.5 μs minimum communication cycle, the high-speed EtherCAT fieldbus subdivides position commands, realizing smoother operation of devices.
It can be used together with our controller "SANMOTION C EtherCAT Interface type".

Lineup: 25, 50, 100, 150, 300, 800 A



Built-in Positioning Function (Parallel or Serial) Type → p. 51

The need for a positioning control unit is eliminated, simplifying the system.

Lineup: 25, 50, 100, 150, 300, 800 A



Functional Safety Model (with functional safety module) → p. 76

Analog/Pulse | EtherCAT | Built-in Positioning

With the functional safety expansion, this amplifier can be used with confidence for equipment and robots operated near people. Also, maintenance can be performed without shutting down the equipment power.

Functional safety defined in IEC/EN 61800-5-2:2016: STO (Safe Torque Off), SS1 (Safe Stop 1), SS2 (Safe Stop 2), SOS (Safe Operating Stop), SLS (Safely-Limited Speed), SBC (Safe Brake Control), and SSM (Safe Speed Monitor).



Lineup

Servo Motor

Servo Motor (Rotary Motor)

→ p. 81

Motor type	Flange size, features	
R2 Servo Motor Medium inertia Low ripple	100 mm sq., 130 mm sq., 180 mm sq., 220 mm sq., 275 mm sq., 320 mm sq. The lineup offers a wide range of medium-inertia servo motors. These are ideal for robots, injection molding machines, and general industrial machines.	
R1 Servo Motor Low inertia High power rate	100 mm sq., 130 mm sq., 180 mm sq., 220 mm sq. These are high-acceleration, low-inertia servo motors that feature high torque even at high speed. Ideal for injection molding machines and general industrial machines.	

Safety standards

Our R 3E Model servo amplifiers conform to safety standards (UL, cUL, and EN standards) and the KC Mark as standard. Our servo motors conform to UL, cUL, and EN standards as standard (some models are still in preparation). In addition, all of the products listed in this catalog conform to the EU RoHS Directive (2011/65/EU).

Safe Torque Off model, Safety model

High Performance AC Servo Systems

SANMOTION R
AC SERVO SYSTEMS

3E Model

The 3rd generation of SANMOTION R servo amplifier series "3E Model" features evolved performance with high responsiveness, and are more eco-efficient and easier to use. It contributes to improving machine performance.

Evolved

Cycle time can be shortened by high-speed positioning control

The 3E Model has a speed frequency response of 2.2 kHz, approximately twice that of our conventional product. Additionally, the position settling time has been shortened to 1/3 of the original time. A function for switching between trajectory control and positioning control in real time has been incorporated to significantly reduce the cycle time of your machines.

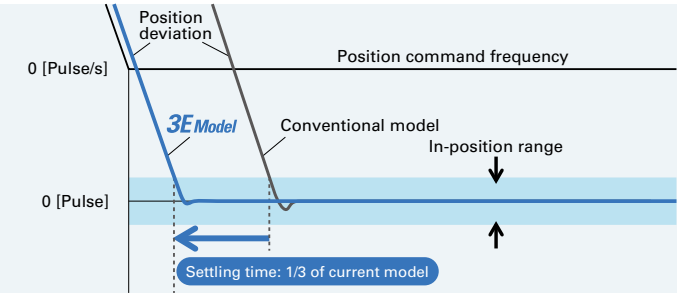

Improved control precision

The 3E Model is equipped with a gain increase function, a function for suppressing microvibrations at settling time, an adaptive notch filter for suppressing mechanical resonance, and a feed-forward vibration control function. This 5th-order notch filter can precisely control the feed shaft of machine tools, significantly improving the processing quality.

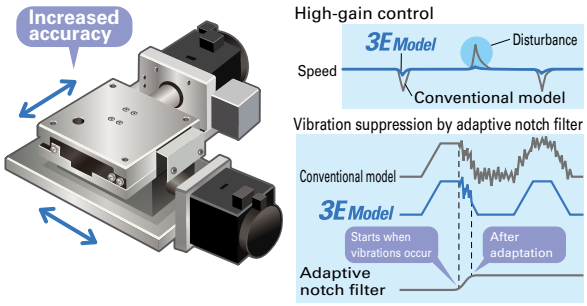

Built-in safety functions

The servo amplifier lineup includes Safe Torque Off (STO) function models,(1) and Functional Safety models(2) that provide extended safety functions. The Functional Safety models feature monitoring of position and speed of machines as well as safe stop so that workers nearby can concentrate on their work with confidence.
With these safety functions, motors can be stopped without shutting down the amplifier power, shortening the machine reboot time. These products are suitable for machines that require high levels of safety.

(1) Safe Torque Off (STO) is a safety function defined in IEC/EN 61800-5-2:2016.
(2) In addition to STO,(1) the followings are also featured: SS1 (Safe Stop 1), SS2 (Safe Stop 2), SOS (Safe Operating Stop), SLS (Safely-Limited Speed), SBC (Safe Brake Control), and SSM (Safe Speed Monitor).

■ Functional safety specifications

Models that facilitate easy integration of safety functions in devices to comply with functional safety are available.

Servo amplifier type	Model no.		Functional safety specifications
	Analog/Pulse	EtherCAT, built-in positioning function	
SANMOTION R 3E Model	RS3□□□□□□□0	–	Models not conforming to the functional safety.
	RS3□□□□□□□2	RS3□□□A□□□4	These models have the Safe Torque Off function. IEC/EN 61800-5-2:2016, STO (Safe Torque Off)
SANMOTION R 3E Model Functional Safety →p. 76	RS3□□□A□□□C	RS3□□□A□□□E	This model has integrated extended safety functions in addition to Safe Torque Off function. Maintenance work can be performed without shutting off the power to the device. System restarting after maintenance work has also been made easy. IEC/EN 61800-5-2:2016, STO (Safe Torque Off), SS1 (Safe Stop 1), SS2 (Safe Stop 2), SOS (Safe Operating Stop), SLS (Safely-Limited Speed), SBC (Safe Brake Control), and SSM (Safe Speed Monitor)

Eco-efficient

Reduced power consumption

Our new servo amplifiers consume less power; a maximum of 15% reduction in power consumption and a maximum of 29% reduction in standby power consumption have been achieved.



Note: Compared with a conventional RS1C02A model.

Power consumption management

Power consumption of your machines can be managed by a monitoring function. The servo amplifier calculates power consumption based on motor current and displays it on the digital operator and setup software.

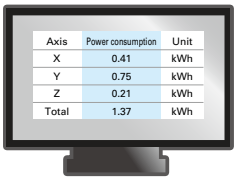

Axis	Power consumption	Unit
X	0.41	kWh
Y	0.75	kWh
Z	0.21	kWh
Total	1.37	kWh

Easy to use

Holding brake control function incorporated as standard

The holding brake function has been incorporated into servo amplifiers as standard, which eliminates the need to newly build a brake control circuit, reducing wiring and costs.

This only applies to 24 VDC brakes.

Note: The holding brake holds the motor in position when power is off, preventing loads from falling.

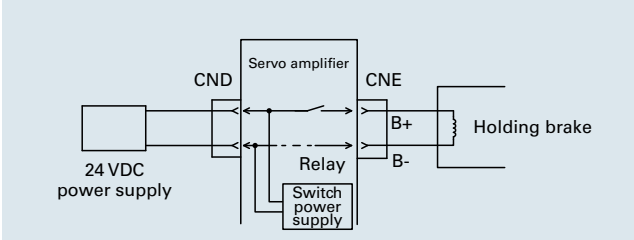

Simple start-up

SANMOTION Motor Setup Software (see p. 102) displays the parameters required for operation in an easy-to-understand manner for quick and easy equipment startup.
This software provides a virtual motor operation function for simulating motor and amplifier operations without actually operating them, and a jog function for checking motor-amplifier connections.
Test runs can be performed without connecting to a host controller.

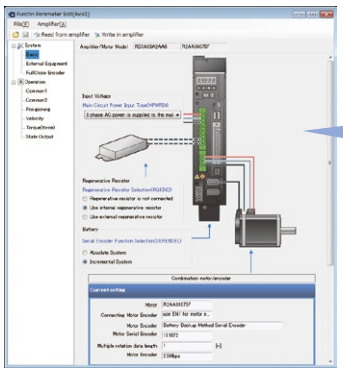

Parameters required for start-up can be minimally set by category, shortening start-up time.

Simplified servo tuning

With the aid of setup software, the 3E Model amplifiers offer a variety of servo tuning support functions such as the automatic optimal tuning mode selection for given mechanical and load conditions, basic tuning mode where only two parameters are adjusted, and application-specific tuning mode. This greatly shortens servo tuning time.

Easy troubleshooting

A drive recorder function for recording motor and amplifier operating status in 1 ms time stamps makes troubleshooting easy by allowing you to keep track of alarms and other abnormalities at a later time.

Model-based following control

The model-following control has achieved target value response, disturbance suppression, and robustness at high levels.

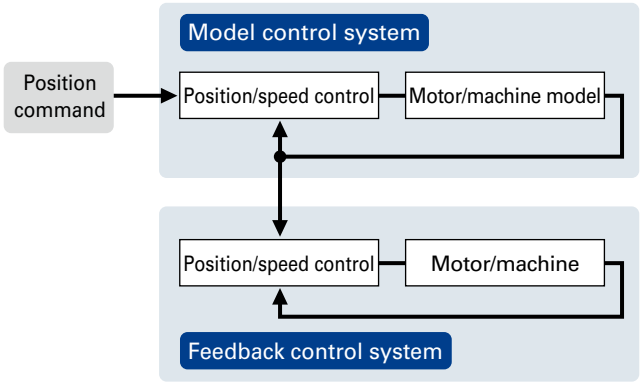

Auto-tuning

The servo amplifier automatically optimizes servo gain and filter frequency in real time.

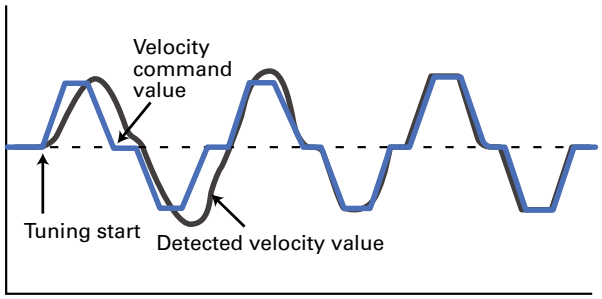

Feed-forward vibration suppression control

With feed-forward vibration suppression control, vibrations of the end effector and the base of machines can be suppressed through simple tuning. Also, the vibration control frequency can be selected.

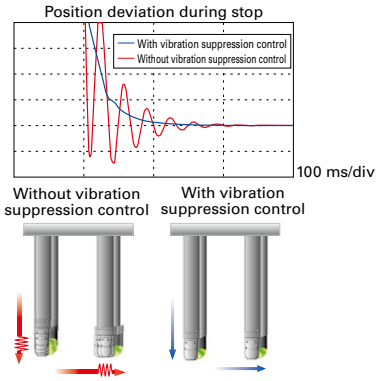

Command following control

A newly employed position and velocity control device has improved the position command following capability. Furthermore, a position deviation of ≒ 0 has been achieved.

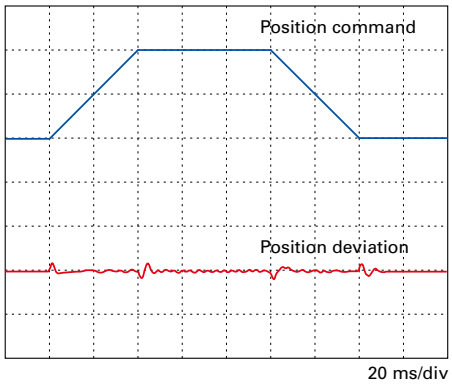

All-in-one control

Configurable parameters allow switching between control modes for torque, position or velocity.

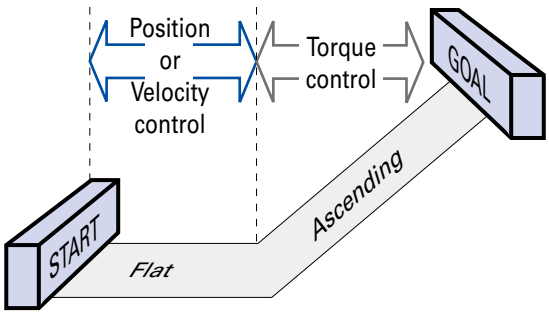

5-digit digital operator LED

The built-in operator allows you to change parameters, monitor amplifier status, and keep track of alarm events.

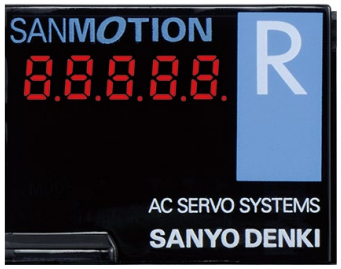

Multi-axis monitoring function

The setup software can display the state of motors and amplifiers of up to 15 axes.

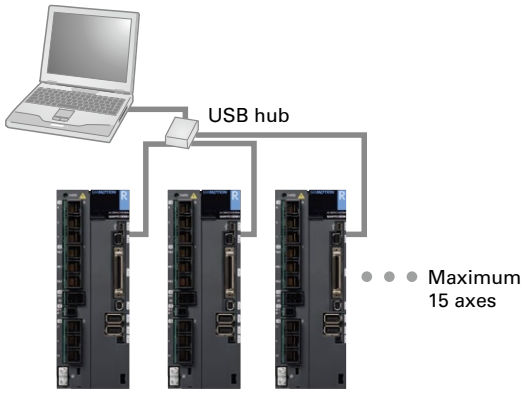

Dual position feedback fully closed-loop control

A fully closed-loop control is possible by using information from two encoders: e.g., a linear encoder mounted on the load machine and a high-resolution motor-mounted encoder. Even when the motor axis and load are highly skewed, the dual position feedback fully closed-loop control allows servo gain to be increased, achieving high responsiveness.

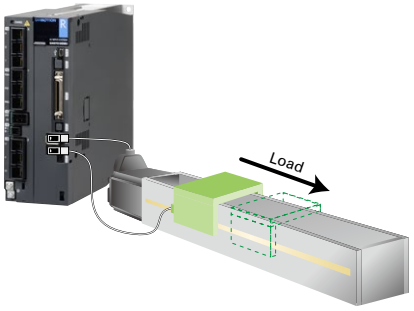

EtherCAT

EtherCAT is a 100 Mbps high-speed fieldbus system.
It contributes to shortening machine cycle time. This highly versatile EtherCAT is compatible with Ethernet, which makes it possible to build a system where various machines co-exist. The servo amplifier firmware can be updated via an EtherCAT network. Also, the EtherCAT conformance test certificate from a trusted third party has been acquired.

EtherCAT Conformance tested



EtherCAT® is a registered trademark and patented technology, licensed by Beckhoff Automation GmbH, Germany.

With built-in positioning function

Servo amplifiers featuring a built-in positioning function are available.
The need for a positioning control unit is eliminated, reducing the number of wires and saving space.
Two types of interface are available: a parallel type and a serial type.
These models are suitable for conveyors and indexing tables.



- Information of a maximum of 254 positions can be saved.
- Optimizes rotary table positioning, finding the shortest path to the target destination.
- Continuous motion, speed at each point, S-curve acceleration/deceleration, and servo gain can be set.

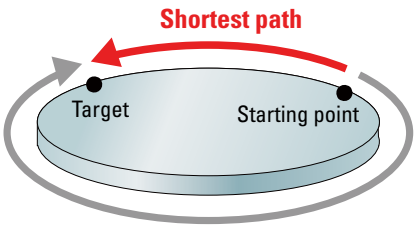

Downsized servo motors

Our R2 series servo motors achieve high torque and high overall performance while reducing the motor length by 22% compared to our conventional product.*

* Comparing an R2CA18350 model and a conventional Q2CA18350 model.

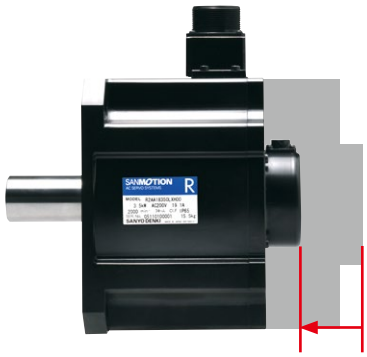

22% reduced

Waterproof and dustproof

Our servo motors are highly resistant to water and dust ingress with IP65* protection, ensuring normal operation even in severe environments. Models with IP67 protection are available as options.

* 320 mm sq. motors have IP55 protection.

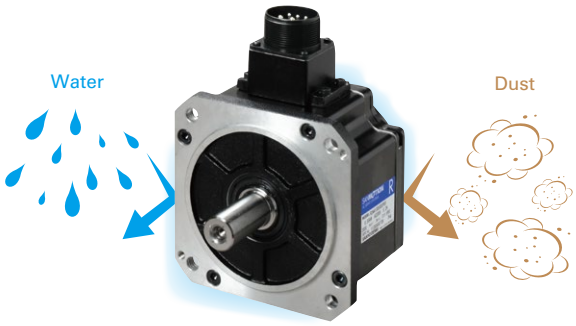

Protection does not cover shaft through-holes and cable ends.
Use with a waterproof cannon plug connector is recommended.

IP 6 5

Protection against dust		Protection against water	
5	Although it is impossible to completely prevent the penetration of dust, there should be no intrusion of an amount of dust that could impede the prescribed operation and safety of the electrical equipment	5	Protected against water jets
6	Completely protected against dust	7	Protected against temporary immersion in water

Low cogging torque

Cogging torque in motors has been reduced compared to our conventional product, achieving smoother machine operation.

Comparison of cogging torque waveforms

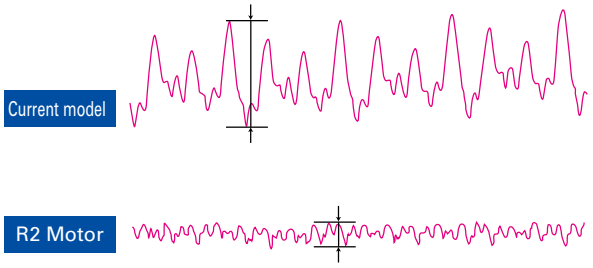

(Reference waveform image)

High-precision battery-less absolute encoder

Our servo motors come with a high-precision battery-less absolute encoder as standard.
It does not use batteries, which require periodic replacement, eliminating cumbersome maintenance work and export procedures.

We offer various encoders that help select the best encoder for your machine.
Refer to the following table.



No need to worry about battery life and battery exporting procedures.

Absolute encoders

Type (Encoder model no. in parentheses)	Single-turn resolution	Multi-turn resolution	Baud rate	Absolute angular accuracy	Custom options
Battery-less absolute encoder (Model No. GAER) This is a high-precision battery-less optical multi-turn encoder. Because there is no need to replace batteries, the encoder can enjoy maintenance-free operation.	131072 (17-bit)	65536 (16-bit)	2.5 Mbps	Approx. 0.167°	・Single-turn resolution 1048576 (20-bit) 8388608 (23-bit) ・Baud rate 4.0 Mbps ・Absolute angular accuracy Under 0.0167°
Single-turn absolute encoder (Model No. PA035S) This is a thin profile, single-turn optical encoder. It helps save wiring and downsize systems particularly for systems where incremental encoders are currently used.	131072 (17-bit)	–	2.5 Mbps	Approx. 0.167°	・Single-turn resolution 1048576 (20-bit) ・Baud rate 4.0 Mbps
Options **Battery-backup absolute encoder** (Model No. PA035C) This is a thin profile, battery-backed multi-turn optical encoder. It helps make the motor length short, and is ideal for machines with limited motor installation space. It requires an optional battery.	131072 (17-bit)	65536 (16-bit)	2.5 Mbps	Approx. 0.167°	・Single-turn resolution 1048576 (20-bit) ・Baud rate 4.0 Mbps

Note: Battery-less absolute resolver encoder with high environmental durability is also available.

Incremental encoder

Type (Encoder model no. in parentheses)	Classification	Pulses per rotation
Wire-saving incremental encoder (Model No. PP031H) This is an A, B, Z phase incremental encoder and can be combined with a host controller easily.	Options	Up to 10000 PPR

Servo Amplifier and Servo Motor Combination Table

Standard specifications Ⓢ ... Output shaft: straight, oil seal: no, connection: cannon plug

Ⓚ ... Output shaft: with key, oil seal: yes, connection: cannon plug (15 kW or less) or terminal block (20 kW or higher)

Servo motor							Servo amplifier
Classification	Rated output [kW]	Flange size	Model no.	Standard specification	Page		**R 3E Model**
					Specifications	Dimensions	Analog/Pulse type p. 19 EtherCAT type p. 37 Built-in positioning type p. 51
R2 Servo motor 400 V class Medium inertia	**0.55**	130 mm sq.	R2CA13050D□□	Ⓚ	p. 82	p. 92	RS3C02A□□《25 A》
	0.75	100 mm sq.	R2CA10075F□□	Ⓢ	p. 82	p. 92	RS3C02A□□《25 A》
	1.0	100 mm sq.	R2CA10100F□□	Ⓢ	p. 82	p. 92	RS3C05A□□《50 A》
	1.2	130 mm sq.	R2CA13120R□□	Ⓚ	p. 82	p. 92	RS3C02A□□《25 A》
		130 mm sq.	R2CA13120F□□	Ⓚ	p. 83	p. 92	RS3C05A□□《50 A》
	1.8	130 mm sq.	R2CA13180H□□	Ⓚ	p. 83	p. 92	RS3C02A□□《25 A》
		130 mm sq.	R2CA13180D□□	Ⓚ	p. 83	p. 92	RS3C05A□□《50 A》
	2.0	130 mm sq.	R2CA13200L□□	Ⓚ	p. 84	p. 93	RS3C02A□□《25 A》
		130 mm sq.	R2CA13200H□□	Ⓚ	p. 84	p. 93	RS3C05A□□《50 A》
	3.5	180 mm sq.	R2CA18350L□□	Ⓚ	p. 84	p. 93	RS3C05A□□《50 A》
		180 mm sq.	R2CA18350D□□	Ⓚ	p. 85	p. 93	RS3C10A□□《100 A》
	4.5	180 mm sq.	R2CA18450H□□	Ⓚ	p. 85	p. 93	RS3C10A□□《100 A》
	5.5	180 mm sq.	R2CA18550R□□	Ⓚ	p. 85	p. 93	RS3C10A□□《100 A》
		180 mm sq.	R2CA18550H□□	Ⓚ	p. 86	p. 93	RS3C15A□□《150 A》
	7.5	180 mm sq.	R2CA18750H□□	Ⓚ	p. 86	p. 94	RS3C15A□□《150 A》
	11	220 mm sq.	R2CA2211KB□□	Ⓚ	p. 86	p. 94	RS3C15A□□《150 A》
	15	220 mm sq.	R2CA2215KV□□	Ⓚ	p. 87	p. 94	RS3C15A□□《150 A》
	20	220 mm sq.	R2CA2220KV□□	Ⓚ	p. 87	p. 95	RS3C30A□□《300 A》
	30	275 mm sq.	R2CA2830KV□□	Ⓚ	p. 87	p. 95	RS3C30A□□《300 A》
	55	320 mm sq.	R2CA3255KB□□	Ⓚ	p. 87	p. 96	RS3D80A□□《800 A》
R1 Servo motor 400 V class Low inertia	**1.5**	100 mm sq.	R1CA10150V□□	Ⓚ	p. 88	p. 97	RS3C02A□□《25 A》
	2.0	100 mm sq.	R1CA10200V□□	Ⓚ	p. 88	p. 97	RS3C05A□□《50 A》
	3.0	130 mm sq.	R1CA13300V□□	Ⓚ	p. 89	p. 97	RS3C05A□□《50 A》
	5.5	180 mm sq.	R1CA18550H□□	Ⓚ	p. 89	p. 98	RS3C15A□□《150 A》
	7.5	180 mm sq.	R1CA18750L□□	Ⓚ	p. 90	p. 98	RS3C15A□□《150 A》
	11	180 mm sq.	R1CA1811KR□□	Ⓚ	p. 90	p. 98	RS3C15A□□《150 A》
	15	180 mm sq.	R1CA1815KB□□	Ⓚ	p. 91	p. 98	RS3C15A□□《150 A》
	21	220 mm sq.	R1CA2220KV□□	Ⓚ	p. 91	p. 98	RS3C30A□□《300 A》

Standard Model Number List

Contact us for specifications of models that are not listed.

Input voltage 400 VAC

Servo Amplifier R 3E Model Analog/Pulse Input Type

Main circuit power supply	Control circuit power supply	Encoder type	General-purpose output	Internal regenerative resistor	STO function [1]	Functional Safety [2]	Amplifier capacity	Model no.	Page	
									Specifications	Dimensions
400 VAC class 380 to 480 VAC 3-phase	24 VDC	Absolute encoder	Sinking type (NPN)	✓	–	–	25 A	RS3C02A0AA0	p. 26	p. 27
							50 A	RS3C05A0AA0	p. 26	p. 27
							100 A	RS3C10A0AA0	p. 26	p. 27
				–			150 A	RS3C15A0AL0	p. 26	p. 28
							300 A	RS3C30A0AM0	p. 26	p. 28
							800 A	RS3D80A0AM0	p. 26	p. 29
				✓	✓ (Without delay circuit)	–	25 A	RS3C02A0AA2	p. 26	p. 27
							50 A	RS3C05A0AA2	p. 26	p. 27
							100 A	RS3C10A0AA2	p. 26	p. 27
				–			150 A	RS3C15A0AL2	p. 26	p. 28
							300 A	RS3C30A0AM2	p. 26	p. 28
							800 A	RS3D80A0AM2	p. 26	p. 29
				✓	✓ (Without delay circuit)	✓	25 A	RS3C02A0AAC	pp. 26, 76	p. 78
							50 A	RS3C05A0AAC	pp. 26, 76	p. 78
							100 A	RS3C10A0AAC	pp. 26, 76	p. 78
				–			150 A	RS3C15A0ALC	pp. 26, 76	p. 28
							300 A	RS3C30A0AMC	pp. 26, 76	p. 28
							800 A	RS3D80A0AMC	pp. 26, 76	p. 29
			Sourcing type (PNP)	✓	–	–	25 A	RS3C02A0BA0	p. 26	p. 27
							50 A	RS3C05A0BA0	p. 26	p. 27
							100 A	RS3C10A0BA0	p. 26	p. 27
				–			150 A	RS3C15A0BL0	p. 26	p. 28
							300 A	RS3C30A0BM0	p. 26	p. 28
							800 A	RS3D80A0BM0	p. 26	p. 29
				✓	✓ (Without delay circuit)	–	25 A	RS3C02A0BA2	p. 26	p. 27
							50 A	RS3C05A0BA2	p. 26	p. 27
							100 A	RS3C10A0BA2	p. 26	p. 27
				–			150 A	RS3C15A0BL2	p. 26	p. 28
							300 A	RS3C30A0BM2	p. 26	p. 28
							800 A	RS3D80A0BM2	p. 26	p. 29
				✓	✓ (Without delay circuit)	✓	25 A	RS3C02A0BAC	pp. 26, 76	p. 78
							50 A	RS3C05A0BAC	pp. 26, 76	p. 78
							100 A	RS3C10A0BAC	pp. 26, 76	p. 78
				–			150 A	RS3C15A0BLC	pp. 26, 76	p. 28
							300 A	RS3C30A0BMC	pp. 26, 76	p. 28
							800 A	RS3D80A0BMC	pp. 26, 76	p. 29

Servo Amplifier R 3E Model EtherCAT Interface Type

Main circuit power supply	Control circuit power supply	Encoder type	General-purpose output	Internal regenerative resistor	STO function [1]	Functional Safety [2]	Amplifier capacity	Model no.	Page	
									Specifications	Dimensions
400 VAC class 380 to 480 VAC 3-phase	24 VDC	Absolute encoder	Photo relay output	✓	✓ (with delay circuit)	–	25 A	RS3C02A2HA4	p. 44	p. 45
							50 A	RS3C05A2HA4	p. 44	p. 45
							100 A	RS3C10A2HA4	p. 44	p. 45
				–			150 A	RS3C15A2HL4	p. 44	p. 46
							300 A	RS3C30A2HM4	p. 44	p. 46
							800 A	RS3D80A2HM4	p. 44	p. 47
				✓	✓ (with delay circuit)	✓	25 A	RS3C02A2HAE	pp. 44, 76	p. 78
							50 A	RS3C05A2HAE	pp. 44, 76	p. 78
							100 A	RS3C10A2HAE	pp. 44, 76	p. 78
				–			150 A	RS3C15A2HLE	pp. 44, 76	p. 46
							300 A	RS3C30A2HME	pp. 44, 76	p. 46
							800 A	RS3D80A2HME	pp. 44, 76	p. 47

Our servo amplifiers conform to UL, cUL, and EN standards and KC mark as standard.

(1) Safe Torque Off (STO) is a safety function defined in IEC/EN 61800-5-2:2016.

(2) In addition to STO,[1] also SS1 (Safe Stop 1), SS2 (Safe Stop 2), SOS (Safe Operating Stop), SLS (Safely-Limited Speed), SBC (Safe Brake Control), and SSM (Safe Speed Monitor)

Input voltage 400 VAC

Servo Amplifier R 3E Model Built-in Positioning Function, Parallel Type

Main circuit power supply	Control circuit power supply	Encoder type	General-purpose output	Internal regenerative resistor	STO function (1)	Functional Safety (2)	Amplifier capacity	Model no.	Page	
									Specifications	Dimensions
400 VAC class	24 VDC	Absolute encoder	Sinking type (NPN) / Sourcing type (PNP)	✓	✓ (with delay circuit)	–	25 A	RS3C02A0CA4	p. 58	p. 60
							50 A	RS3C05A0CA4	p. 58	p. 60
							100 A	RS3C10A0CA4	p. 58	p. 60
				–			150 A	RS3C15A0CL4	p. 58	p. 61
							300 A	RS3C30A0CM4	p. 58	p. 61
							800 A	RS3D80A0CM4	p. 58	p. 62
				✓	✓ (with delay circuit)	✓	25 A	RS3C02A0CAE	pp. 58, 76	p. 78
							50 A	RS3C05A0CAE	pp. 58, 76	p. 78
							100 A	RS3C10A0CAE	pp. 58, 76	p. 78
				–			150 A	RS3C15A0CLE	pp. 58, 76	p. 61
							300 A	RS3C30A0CME	pp. 58, 76	p. 61
							800 A	RS3D80A0CME	pp. 58, 76	p. 62

Servo Amplifier R 3E Model Built-in Positioning Function Type

Main circuit power supply	Control circuit power supply	Encoder type	General-purpose output	Internal regenerative resistor	STO function (1)	Functional Safety (2)	Amplifier capacity	Model no.	Page	
									Specifications	Dimensions
400 VAC class	24 VDC	Absolute encoder	Photo relay output	✓	✓ (with delay circuit)	–	25 A	RS3C02A0FA4	p. 58	p. 63
							50 A	RS3C05A0FA4	p. 58	p. 63
							100 A	RS3C10A0FA4	p. 58	p. 63
				–			150 A	RS3C15A0FL4	p. 58	p. 64
							300 A	RS3C30A0FM4	p. 58	p. 64
							800 A	RS3D80A0FM4	p. 58	p. 65
				✓	✓ (with delay circuit)	✓	25 A	RS3C02A0FAE	pp. 58, 76	p. 78
							50 A	RS3C05A0FAE	pp. 58, 76	p. 78
							100 A	RS3C10A0FAE	pp. 58, 76	p. 78
				–			150 A	RS3C15A0FLE	pp. 58, 76	p. 64
							300 A	RS3C30A0FME	pp. 58, 76	p. 64
							800 A	RS3D80A0FME	pp. 58, 76	p. 65

Our servo amplifiers conform to UL, cUL, and EN standards and KC mark as standard.

(1) Safe Torque Off (STO) is a safety function defined in IEC/EN 61800-5-2:2016.

(2) In addition to STO,(1) also SS1 (Safe Stop 1), SS2 (Safe Stop 2), SOS (Safe Operating Stop), SLS (Safely-Limited Speed), SBC (Safe Brake Control), and SSM (Safe Speed Monitor)

Standard Model Number List

Contact us for specifications of models that are not listed.

Input voltage 400 VAC

R2 Servo Motor

Standard specifications Ⓢ ... Output shaft: straight, oil seal: no, connection: cannon plug

Ⓚ ... Output shaft: with key, oil seal: yes, connection: cannon plug (15 kW or less) or terminal block (20 kW or higher)

Motor flange size	Rated output	Protection code	Holding brake (24 VDC)	Standard specification	CE/ UKCA/ UL	Model no.		Page	
						Battery-less absolute encoder	Single-turn absolute encoder	Specifications	Dimensions
130 mm sq.	550 W	IP65	–	Ⓚ	✓	R2CA13050DXR00M	R2CA13050DXH00M	p. 82	p. 92
			✓	Ⓚ	✓	R2CA13050DCR00M	R2CA13050DCH00M	p. 82	p. 92
100 mm sq.	750 W	IP65	–	Ⓢ	✓	R2CA10075FXR03M	R2CA10075FXH03M	p. 82	p. 92
			✓	Ⓢ	✓	R2CA10075FCR03M	R2CA10075FCH03M	p. 82	p. 92
	1.0 kW	IP65	–	Ⓢ	✓	R2CA10100FXR03M	R2CA10100FXH03M	p. 82	p. 92
			✓	Ⓢ	✓	R2CA10100FCR03M	R2CA10100FCH03M	p. 82	p. 92
130 mm sq.	1.2 kW	IP65	–	Ⓚ	✓	R2CA13120RXR00M	R2CA13120RXH00M	p. 82	p. 92
			✓	Ⓚ	✓	R2CA13120RCR00M	R2CA13120RCH00M	p. 82	p. 92
			–	Ⓚ	✓	R2CA13120FXR00M	R2CA13120FXH00M	p. 83	p. 92
			✓	Ⓚ	✓	R2CA13120FCR00M	R2CA13120FCH00M	p. 83	p. 92
	1.8 kW	IP65	–	Ⓚ	✓	R2CA13180HXR00M	R2CA13180HXH00M	p. 83	p. 92
			✓	Ⓚ	✓	R2CA13180HCR00M	R2CA13180HCH00M	p. 83	p. 92
			–	Ⓚ	✓	R2CA13180DXR00M	R2CA13180DXH00M	p. 83	p. 92
			✓	Ⓚ	✓	R2CA13180DCR00M	R2CA13180DCH00M	p. 83	p. 92
	2.0 kW	IP65	–	Ⓚ	✓	R2CA13200LXR00M	R2CA13200LXH00M	p. 84	p. 93
			✓	Ⓚ	✓	R2CA13200LCR00M	R2CA13200LCH00M	p. 84	p. 93
			–	Ⓚ	✓	R2CA13200HXR00M	R2CA13200HXH00M	p. 84	p. 93
			✓	Ⓚ	✓	R2CA13200HCR00M	R2CA13200HCH00M	p. 84	p. 93
180 mm sq.	3.5 kW	IP65	–	Ⓚ	✓	R2CA18350LXR00M	R2CA18350LXH00M	p. 84	p. 93
			✓	Ⓚ	✓	R2CA18350LCR00M	R2CA18350LCH00M	p. 84	p. 93
			–	Ⓚ	✓	R2CA18350DXR00M	R2CA18350DXH00M	p. 85	p. 93
			✓	Ⓚ	✓	R2CA18350DCR00M	R2CA18350DCH00M	p. 85	p. 93
	4.5 kW	IP65	–	Ⓚ	✓	R2CA18450HXR00M	R2CA18450HXH00M	p. 85	p. 93
			✓	Ⓚ	✓	R2CA18450HCR00M	R2CA18450HCH00M	p. 85	p. 93
	5.5 kW	IP65	–	Ⓚ	✓	R2CA18550RXR00M	R2CA18550RXH00M	p. 85	p. 93
			✓	Ⓚ	✓	R2CA18550RCR00M	R2CA18550RCH00M	p. 85	p. 93
			–	Ⓚ	✓	R2CA18550HXR00M	R2CA18550HXH00M	p. 86	p. 93
			✓	Ⓚ	✓	R2CA18550HCR00M	R2CA18550HCH00M	p. 86	p. 93
	7.5 kW	IP65	–	Ⓚ	✓	R2CA18750HXR00M	R2CA18750HXH00M	p. 86	p. 94
			✓	Ⓚ	✓	R2CA18750HCR00M	R2CA18750HCH00M	p. 86	p. 94
220 mm sq.	11 kW	IP65	–	Ⓚ	✓	R2CA2211KBXR00M	R2CA2211KBXH00M	p. 86	p. 94
			✓	Ⓚ	✓	R2CA2211KBCR00M	R2CA2211KBCH00M	p. 86	p. 94
	15 kW	IP65	–	Ⓚ	✓	R2CA2215KVXR00M	R2CA2215KVXH00M	p. 87	p. 94
			✓	Ⓚ	✓	R2CA2215KVCR00M	R2CA2215KVCH00M	p. 87	p. 94
	20 kW	IP65*	–	Ⓚ	✓	R2CA2220KVXR00M	R2CA2220KVXH00M	p. 87	p. 95
			✓	Ⓚ	✓	R2CA2220KVCR00M	R2CA2220KVCH00M	p. 87	p. 95
275 mm sq.	30 kW	IP65*	–	Ⓚ	✓	R2CA2830KVXR00M	R2CA2830KVXH00M	p. 87	p. 95
			✓	Ⓚ	✓	R2CA2830KVCR00M	R2CA2830KVCH00M	p. 87	p. 95
320 mm sq.	55 kW	IP55*	–	Ⓚ	–	R2CA3255KBXR00	R2CA3255KBXH00	p. 87	p. 96

* Excluding cooling fans and terminal boxes

Input voltage 400 VAC

R1 Servo Motor

Standard specifications (S) ... Output shaft: straight, oil seal: no, connection: cannon plug
(K) ... Output shaft: with key, oil seal: yes, connection: cannon plug (15 kW or less) or terminal block (20 kW or higher)

Motor flange size	Rated output	Protection code	Holding brake (24 VDC)	Standard specification	CE/ UKCA/ UL	Model no.		Page	
						Battery-less absolute encoder	Single-turn absolute encoder	Specifications	Dimensions
100 mm sq.	1.5 kW	IP65	–	(K)	✓	R1CA10150VXR00M	R1CA10150VXH00M	p. 88	p. 97
			✓	(K)	✓	R1CA10150VCR00M	R1CA10150VCH00M	p. 88	p. 97
	2.0 kW	IP65	–	(K)	✓	R1CA10200VXR00M	R1CA10200VXH00M	p. 88	p. 97
			✓	(K)	✓	R1CA10200VCR00M	R1CA10200VCH00M	p. 88	p. 97
130 mm sq.	3.0 kW	IP65	–	(K)	✓	R1CA13300VXR00M	R1CA13300VXH00M	p. 89	p. 97
			✓	(K)	✓	R1CA13300VCR00M	R1CA13300VCH00M	p. 89	p. 97
180 mm sq.	5.5 kW	IP65	–	(K)	✓	R1CA18550HXR00M	R1CA18550HXH00M	p. 89	p. 98
			✓	(K)	✓	R1CA18550HCR00M	R1CA18550HCH00M	p. 89	p. 98
	7.5 kW	IP65	–	(K)	✓	R1CA18750LXR00M	R1CA18750LXH00M	p. 90	p. 98
			✓	(K)	✓	R1CA18750LCR00M	R1CA18750LCH00M	p. 90	p. 98
	11 kW	IP65	–	(K)	✓	R1CA1811KRXR00M	R1CA1811KRXH00M	p. 90	p. 98
			✓	(K)	✓	R1CA1811KRCR00M	R1CA1811KRCH00M	p. 90	p. 98
	15 kW	IP65	–	(K)	✓	R1CA1815KBXR00M	R1CA1815KBXH00M	p. 91	p. 98
			✓	(K)	✓	R1CA1815KBCR00M	R1CA1815KBCH00M	p. 91	p. 98
220 mm sq.	21 kW	IP65*	–	(K)	✓	R1CA2220KVXR00M	R1CA2220KVXH00M	p. 91	p. 98

* Excluding cooling fans and terminal boxes

Standard Model Number List

Contact us for specifications of models that are not listed.

R 3E Model Servo Amplifier Options

Model no.	Category	Remarks	Page
AL-00385594	Servo amplifier connector	Single item, CN1	pp. 102, 103 pp. 106, 107
AL-00849548-02	Servo amplifier connector	Single item, CN4	pp. 102, to 109
AL-00632607	Servo amplifier connector	Single item, EN1 or EN2*	pp. 102, 103
AL-00718252-01	Servo amplifier connector	Single item, CN4	pp. 102 to 109
AL-00953866-01	Servo amplifier connector	Single item, CNA, CNB, or CNC	pp. 102, 104 pp. 106, 108
AL-00953863-01	Servo amplifier connector	Single item, CNA	pp. 102, 104 pp. 106, 108
AL-00953864-01	Servo amplifier connector	Single item, CNC	pp. 102, 104 pp. 106, 108
AL-00961843-01	Servo amplifier connector	Single item, CND	pp. 102, 104 pp. 106, 108
AL-00961844-01	Servo amplifier connector	Single item, CND	pp. 102, 104 pp. 106, 108
AL-00953867-01	Servo amplifier connector	Single item, CNE	pp. 102, 104 pp. 106, 108
AL-00953868-01	Servo amplifier connector	Single item, CNE	pp. 102, 104 pp. 106, 108
AL-00953865-01	Servo amplifier connector	Single item, CNB	pp. 102, 104 pp. 106, 108
AL-Y0012189-01	Servo amplifier connector	Single item, SF-CN1/SF-CN2*	pp. 102 to 109
AL-00842383	Servo amplifier connector	Single item, CN2	pp. 104, 105 pp. 108, 109
AL-00530312-01	Servo amplifier connector	Single item, EN1/EN2*	pp. 104 to 109
AL-01017659	Servo amplifier connector	Single item, CN10	pp. 103, 105 pp. 107, 109
AL-00966991	Servo amplifier connector	Connector set	p. 102
AL-00966995	Servo amplifier connector	Connector set	p. 102
AL-00967013	Servo amplifier connector	Connector set	p. 102
AL-00967017	Servo amplifier connector	Connector set	p. 102
AL-00723159	Servo amplifier connector	Connector set	pp. 102, 103
AL-00723290	Servo amplifier connector	Connector set	pp. 102, 103
AL-00966993	Servo amplifier connector	Connector set	pp. 102, 103
AL-00967015	Servo amplifier connector	Connector set	pp. 102, 103

Model no.	Category	Remarks	Page
AL-00977750	Servo amplifier connector	Connector set	pp. 104, 108
AL-00977754	Servo amplifier connector	Connector set	pp. 104, 108
AL-00977732	Servo amplifier connector	Connector set	pp. 104, 105 pp. 108, 109
AL-00977752	Servo amplifier connector	Connector set	pp. 104, 105 pp. 108, 109
AL-01002534	Servo amplifier connector	Connector set	pp. 104, 105 pp. 108, 109
AL-01002536	Servo amplifier connector	Connector set	pp. 104, 105 pp. 108, 109
AL-01108220	Servo amplifier connector	Connector set	pp. 106, 107
AL-01108242	Servo amplifier connector	Connector set	p. 106
AL-01108244	Servo amplifier connector	Connector set	pp. 106, 107
AL-01108245	Servo amplifier connector	Connector set	p. 106
AL-00896515-01	USB cable for setup software	1 m	p. 113
AL-00896515-02	USB cable for setup software	2 m	p. 113
AL-00911582-01	Amplifier-amplifier cable for tandem operation	0.2 m	p. 113
AL-00911582-02	Amplifier-amplifier cable for tandem operation	3.0 m	p. 113
AL-01101867-01	Controller-amplifier Modbus cable	1 m	p. 113
AL-01101867-03	Controller-amplifier Modbus cable	3 m	p. 113
AL-01101867-05	Controller-amplifier Modbus cable	5 m	p. 113
AL-01101867-07	Controller-amplifier Modbus cable	7 m	p. 113
AL-01101867-10	Controller-amplifier Modbus cable	10 m	p. 113
AL-01101866-01	Amplifier-amplifier Modbus cable	0.2 m	p. 113
AL-01101866-02	Amplifier-amplifier Modbus cable	0.5 m	p. 113
AL-01101866-03	Amplifier-amplifier Modbus cable	1 m	p. 113
AL-01101866-04	Amplifier-amplifier Modbus cable	3 m	p. 113
AL-01101866-05	Amplifier-amplifier Modbus cable	5 m	p. 113
AL-01101866-06	Amplifier-amplifier Modbus cable	7 m	p. 113
AL-01101866-07	Amplifier-amplifier Modbus cable	10 m	p. 113
AL-01101864	Terminating connector	For short-circuiting terminating resistors	p. 113

* Note that this is not a set of two connectors, but a single connector.

Standard Model Number List

Contact us for specifications of models that are not listed.

R 3E Model Servo Amplifier Options

Model no.	Category	Remarks	Page
AL-01020858-01	Copper connection bar between amplifiers	800 A	p. 113
AL-01018354-01	Amplifier-amplifier cable	800 A	p. 113
AL-00964811-01	Servo motor power cable	1 m	p. 114
AL-00964811-02	Servo motor power cable	2 m	p. 114
AL-00964811-03	Servo motor power cable	3 m	p. 114
AL-00964811-05	Servo motor power cable	5 m	p. 114
AL-00964811-10	Servo motor power cable	10 m	p. 114
AL-00964812-01	Servo motor power cable	1 m	p. 114
AL-00964812-02	Servo motor power cable	2 m	p. 114
AL-00964812-03	Servo motor power cable	3 m	p. 114
AL-00964812-05	Servo motor power cable	5 m	p. 114
AL-00964812-10	Servo motor power cable	10 m	p. 114
AL-00965739-01	Servo motor power cable	1 m	p. 114
AL-00965739-02	Servo motor power cable	2 m	p. 114
AL-00965739-03	Servo motor power cable	3 m	p. 114
AL-00965739-05	Servo motor power cable	5 m	p. 114
AL-00965739-10	Servo motor power cable	10 m	p. 114
AL-00965740-01	Servo motor power cable	1 m	p. 114
AL-00965740-02	Servo motor power cable	2 m	p. 114
AL-00965740-03	Servo motor power cable	3 m	p. 114
AL-00965740-05	Servo motor power cable	5 m	p. 114
AL-00965740-10	Servo motor power cable	10 m	p. 114
AL-00965741-01	Servo motor power cable	1 m	p. 114
AL-00965741-02	Servo motor power cable	2 m	p. 114
AL-00965741-03	Servo motor power cable	3 m	p. 114
AL-00965741-05	Servo motor power cable	5 m	p. 114
AL-00965741-10	Servo motor power cable	10 m	p. 114
AL-00965742-01	Servo motor power cable	1 m	p. 114
AL-00965742-02	Servo motor power cable	2 m	p. 114
AL-00965742-03	Servo motor power cable	3 m	p. 114
AL-00965742-05	Servo motor power cable	5 m	p. 114
AL-00965742-10	Servo motor power cable	10 m	p. 114
AL-00965743-01	Servo motor power cable	1 m	p. 114
AL-00965743-02	Servo motor power cable	2 m	p. 114
AL-00965743-03	Servo motor power cable	3 m	p. 114
AL-00965743-05	Servo motor power cable	5 m	p. 114
AL-00965743-10	Servo motor power cable	10 m	p. 114
AL-00965744-01	Servo motor power cable	1 m	p. 114
AL-00965744-02	Servo motor power cable	2 m	p. 114
AL-00965744-03	Servo motor power cable	3 m	p. 114
AL-00965744-05	Servo motor power cable	5 m	p. 114
AL-00965744-10	Servo motor power cable	10 m	p. 114
AL-00997919-01	Servo motor power cable	1 m	p. 115
AL-00997919-02	Servo motor power cable	2 m	p. 115
AL-00997919-03	Servo motor power cable	3 m	p. 115
AL-00997919-05	Servo motor power cable	5 m	p. 115
AL-00997919-10	Servo motor power cable	10 m	p. 115
AL-00997920-01	Servo motor power cable	1 m	p. 115
AL-00997920-02	Servo motor power cable	2 m	p. 115
AL-00997920-03	Servo motor power cable	3 m	p. 115
AL-00997920-05	Servo motor power cable	5 m	p. 115
AL-00997920-10	Servo motor power cable	10 m	p. 115
AL-00997921-01	Servo motor power cable	1 m	p. 115
AL-00997921-02	Servo motor power cable	2 m	p. 115
AL-00997921-03	Servo motor power cable	3 m	p. 115
AL-00997921-05	Servo motor power cable	5 m	p. 115
AL-00997921-10	Servo motor power cable	10 m	p. 115
AL-00999240-01	Servo motor power cable	1 m	p. 115
AL-00999240-02	Servo motor power cable	2 m	p. 115
AL-00999240-03	Servo motor power cable	3 m	p. 115
AL-00999240-05	Servo motor power cable	5 m	p. 115
AL-00999240-10	Servo motor power cable	10 m	p. 115
AL-00937694-01	Servo motor encoder cable	1 m	p. 116
AL-00937694-02	Servo motor encoder cable	2 m	p. 116
AL-00937694-03	Servo motor encoder cable	3 m	p. 116
AL-00937694-05	Servo motor encoder cable	5 m	p. 116
AL-00937694-10	Servo motor encoder cable	10 m	p. 116
RS-CA9-01-R	Servo motor encoder cable	1 m	p. 116
RS-CA9-02-R	Servo motor encoder cable	2 m	p. 116
RS-CA9-03-R	Servo motor encoder cable	3 m	p. 116
RS-CA9-05-R	Servo motor encoder cable	5 m	p. 116
RS-CA9-10-R	Servo motor encoder cable	10 m	p. 116
AL-00999243-01	Servo motor encoder cable	1 m	p. 116
AL-00999243-02	Servo motor encoder cable	2 m	p. 116
AL-00999243-03	Servo motor encoder cable	3 m	p. 116
AL-00999243-05	Servo motor encoder cable	5 m	p. 116
AL-00999243-10	Servo motor encoder cable	10 m	p. 116
RS-CA10-01-R	Servo motor encoder cable	1 m	p. 116
RS-CA10-02-R	Servo motor encoder cable	2 m	p. 116
RS-CA10-03-R	Servo motor encoder cable	3 m	p. 116
RS-CA10-05-R	Servo motor encoder cable	5 m	p. 116
RS-CA10-10-R	Servo motor encoder cable	10 m	p. 116
AL-00997923-01	Servo motor cooling fan power cable	1 m	p. 117
AL-00997923-02	Servo motor cooling fan power cable	2 m	p. 117
AL-00997923-03	Servo motor cooling fan power cable	3 m	p. 117
AL-00997923-05	Servo motor cooling fan power cable	5 m	p. 117
AL-00997923-10	Servo motor cooling fan power cable	10 m	p. 117
AL-00999241-01	Servo motor cooling fan power cable	1 m	p. 117
AL-00999241-02	Servo motor cooling fan power cable	2 m	p. 117
AL-00999241-03	Servo motor cooling fan power cable	3 m	p. 117
AL-00999241-05	Servo motor cooling fan power cable	5 m	p. 117
AL-00999241-10	Servo motor cooling fan power cable	10 m	p. 117
AL-00918630-01	Servo motor brake cable	1 m	p. 117
AL-00918630-02	Servo motor brake cable	2 m	p. 117
AL-00918630-03	Servo motor brake cable	3 m	p. 117
AL-00918630-05	Servo motor brake cable	5 m	p. 117
AL-00918630-10	Servo motor brake cable	10 m	p. 117
AL-00999239-01	Servo motor brake cable	1 m	p. 117
AL-00999239-02	Servo motor brake cable	2 m	p. 117
AL-00999239-03	Servo motor brake cable	3 m	p. 117
AL-00999239-05	Servo motor brake cable	5 m	p. 117
AL-00999239-10	Servo motor brake cable	10 m	p. 117
AL-00999242-02	Servo motor cooling fan thermostat cable	2 m	p. 117
AL-00999242-03	Servo motor cooling fan thermostat cable	3 m	p. 117
AL-00999242-05	Servo motor cooling fan thermostat cable	5 m	p. 117
AL-00999242-10	Servo motor cooling fan thermostat cable	10 m	p. 117
R-ACL-02KC	AC Reactors		p. 118
R-ACL-05KC	AC Reactors		p. 118
R-ACL-15KC	AC Reactors		p. 118
R-ACL-30KC	AC Reactors		p. 118
R-ACL-75KC	AC Reactors		p. 118
Q-MON-3	Analog monitor box		p. 118
AL-00690525-01	Analog monitor dedicated cable		p. 118
REGIST-500CW80B	External regenerative resistor	500 W	p. 119
REGIST-500CW40B	External regenerative resistor	500 W	p. 119
REGIST-500CW20B	External regenerative resistor	500 W	p. 119
REGIST-500CW14B	External regenerative resistor	500 W	p. 119
REGIST-500CW7B	External regenerative resistor	500 W	p. 119
AL-00962547-01	Front mounting brackets	25 A	p. 119

Servo Amplifier

R 3E Model Analog/Pulse Input Type

Amplifier capacity: 25 to 800 A

This is a high-responsiveness AC servo amplifier that pursues evolved performance, energy efficiency, and ease of use.

Safe Torque Off function equipped models are also available. Safe Torque Off (STO) is a safety function defined in IEC/EN 61800-5-2:2016. The product lineup also includes Functional Safety models that have more extensive safety functions.



■ How to Read Model Numbers

Note that not all the possible combinations of the numbers and characters below are valid.
Also, some of the numbers/characters listed below are for optional models.
For model numbers valid as standard products, refer to "Standard Model Number List".

Servo amplifier

RS3 C 02 A 0 A A 0

Option 2

Code	Speed/torque command input circuit	Safe Torque Off function	Functional Safety
0	✓	—	—
2	✓	✓ (without delay circuit)	—
4	✓	✓ (with delay circuit	—
C	✓	✓ (without delay circuit)	✓
E	✓	✓ (with delay circuit)	✓

Option 1

Code	Specifications	Amp. capacity
A	With built-in regenerative resistor & With DB resistor	25 to 100 A
L	Without built-in regenerative resistor (option: external) & With DB resistor	150 A
M	Without built-in regenerative resistor (option: external) & Without DB resistor	300 A, 800 A

Note: The 800 A amplifier's regenerative resistor is to be connected to a 55 kW power supply unit.

Interface

Code	Specifications
A	Analog/Pulse, Sink (NPN) type general-purpose output
B	Analog/Pulse, Source (PNP) type general-purpose output

Encoder connection type

Code	EN1 (Motor encoder)	EN2 (Motor encoder or external encoder)
0	Absolute encoder	—
2	Absolute encoder	Incremental encoder for motor External incremental encoder for fully closed-loop systems
8	Incremental encoder	—
9	Incremental encoder	Absolute encoder
A	Incremental encoder	External incremental encoder for fully closed-loop systems

Servo motor type

Code	Specifications
A	Rotary motor

Servo amplifier capacity

Code	Specifications
02	25 A
05	50 A
10	100 A
15	150 A
30	300 A
80	800 A

Input voltage

Code	Specifications
C	Main 400 VAC /control 24 VDC
D*	Main 560 VDC /control 24 VDC

* Applies to 800 A only. The combination power supply unit's input voltage is 400 VAC.

3E Model series

Power supply unit for 800 A amplifier

RS3PA C 550

Rated output
550 ···55 kW

Input voltage
C ···400 VAC / control 24 VDC

Power supply unit for the 3E Model series

System Configuration

See page 77 for the system configuration of Functional Safety models.

25 to 100 A

The photo shows a 25 A model.

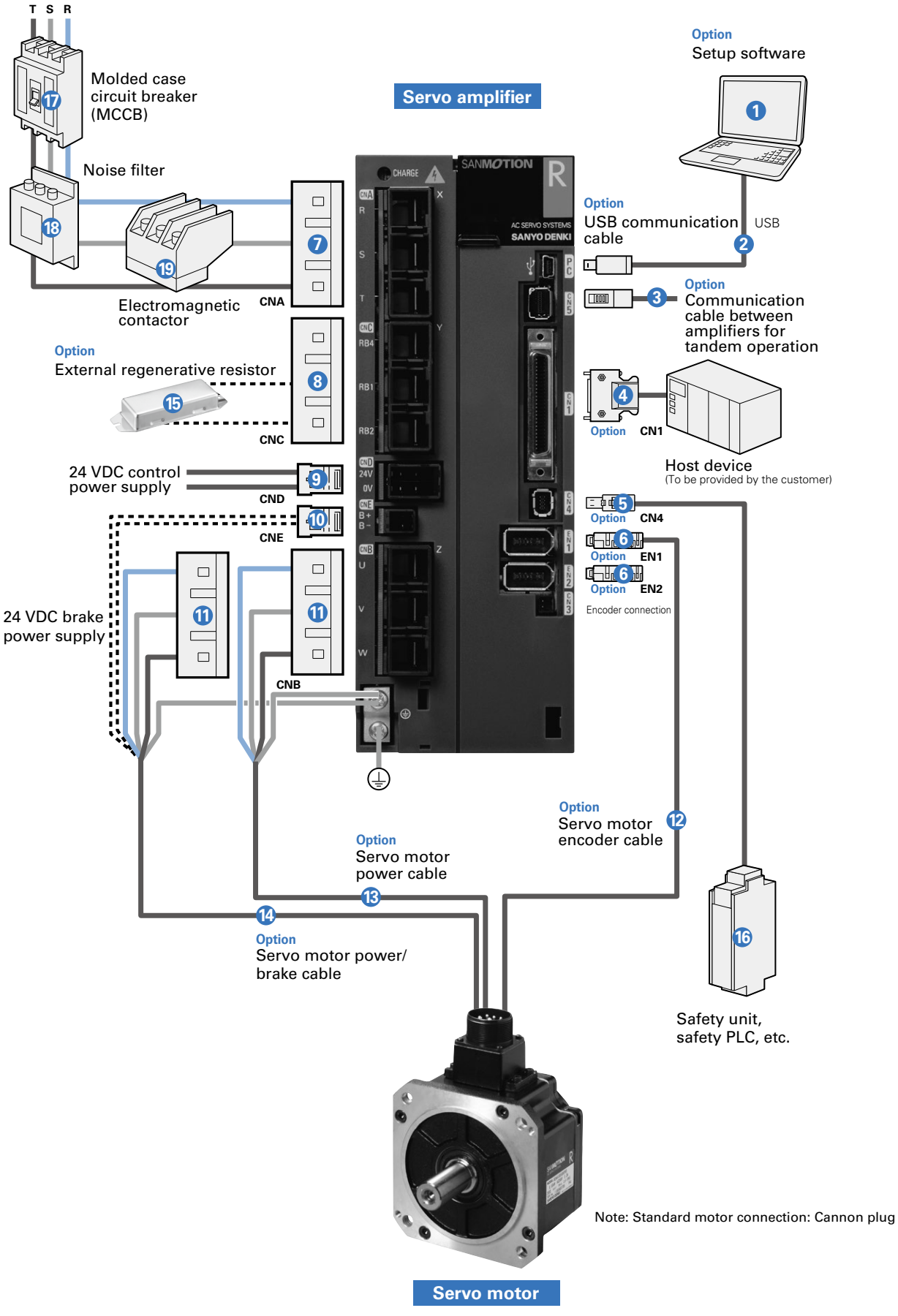

Note: Standard motor connection: Cannon plug

Options and Peripheral Items (25 to 100 A)

No.	Name	Model no.	Description	Page
❶	Setup software	Can be downloaded from Product Information on our website.	Parameters can be set and monitored via communication with a PC.	p. 100
❷	USB cable	AL-00896515-0□	PC cable for setup software	p. 113
❸	Communication cable between amplifiers for tandem operation	AL-00911582-0□	Connects between amplifiers for tandem operation (CN5 ⇔ CN5) Consult us if using the tandem operation function.	p. 113
❹	CN1 connector	AL-00385594	For controller connection	p. 102
❺	CN4 connector	AL-00849548-02 (for short-circuiting), AL-00718252-01 (for wiring)	For safety device connection When CN4 is not used, be sure to buy and insert the optional short-circuiting connector to CN4 on the servo amplifier. (For STO models only)	p. 102
❻	EN1 connector	AL-00632607	For encoder connection	p. 102
	EN2 connector	AL-00632607	For encoder connection	p. 102
❼	CNA connector*	AL-00953863-01	For main circuit power supply connection One will be included with a servo amplifier.	p. 102
❽	CNC connector*	AL-00953864-01	For regenerative resistor connection One will be included with a servo amplifier.	p. 102
❾	CND connector*	AL-00961843-01	For control circuit power supply connection One will be included with a servo amplifier.	p. 102
❿	CNE connector*	AL-00953867-01	For brake connection	p. 102
⓫	CNB connector*	AL-00953865-01	For servo motor connection One will be included with a servo amplifier.	p. 102
⓬	Servo motor cables	AL-00937694-□□	Encoder cable	p. 116
⓭		AL-0096□□□□-□□	Power cable	p. 114
⓮		AL-0096□□□□-□□	Power/brake cable	p. 114
⓯	External regenerative resistor	REGIST-500CW□□B	Used when more regenerative capacity is needed, e.g., high-frequency movements	p. 119
⓰	Safety unit, safety PLC, etc.	To be provided by the customer	Connects I/O signals from the Safe Torque Off function to devices such as a safety unit and safety PLC.	—
⓱	Molded case circuit breaker (MCCB)	To be provided by the customer	Used to protect power lines	—
⓲	Noise filter	To be provided by the customer	Used to prevent external noise from power lines	—
⓳	Electromagnetic contactor	To be provided by the customer	Used to switch the power on and off.	—

* Wiring on the CNA to CNE connectors requires a connector tool. → p. 102

Note 1: Connector sets are also available, rather than separated items. See the respective pages listed above.
Note 2: For the options and peripheral items for Functional Safety models, see page p. 77.

System Configuration

See page 77 for the system configuration of Functional Safety models.

150, 300 A

The photo shows a 300 A model.

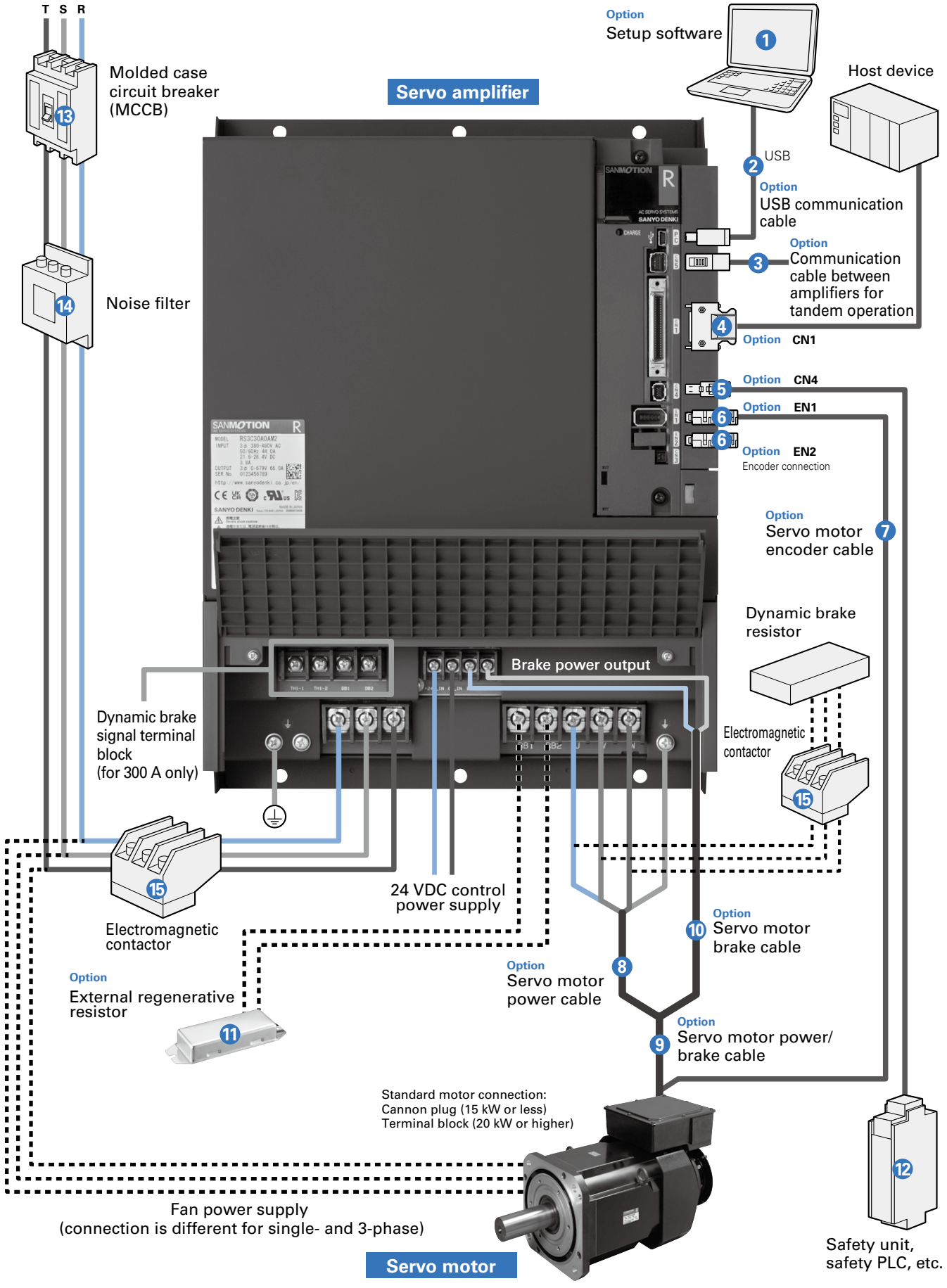

Options and Peripheral Items (150 A, 300 A)

No.	Name	Model no.	Description	Page
❶	Setup software	Can be downloaded from Product Information on our website.	Parameters can be set and monitored via communication with a PC.	p. 100
❷	USB cable	AL-00896515-0□	PC cable for setup software	p. 113
❸	Communication cable between amplifiers for tandem operation	AL-00911582-0□	Connects between amplifiers for tandem operation (CN5 ⇔ CN5) Consult us if using the tandem operation function.	p. 113
❹	CN1 connector	AL-00385594	For controller connection	p. 103
❺	CN4 connector	AL-00849548-02 (for short-circuiting), AL-00718252-01 (for wiring)	For safety device connection When CN4 is not used, be sure to buy and insert the optional short-circuiting connector to CN4 on the servo amplifier. (For STO models only)	p. 103
❻	EN1 connector	AL-00632607	For encoder connection	p. 103
	EN2 connector	AL-00632607	For encoder connection	p. 103
❼	Servo motor cables	AL-009□□□□□-□□	Encoder cable	p. 116
❽		AL-009□□□□□-□□	Power cable	pp. 114 to 115
❾		AL-009□□□□□-□□	Power/brake cable	pp. 114 to 115
❿		AL-009□□□□□-□□	For brake connection	p. 117
⓫	External regenerative resistor	REGIST-500CW□□B	Used when more regenerative capacity is needed, e.g., high-frequency movements	p. 119
⓬	Safety unit, safety PLC, etc.	To be provided by the customer	Connects I/O signals from the Safe Torque Off function to devices such as a safety unit and safety PLC.	—
⓭	Molded case circuit breaker (MCCB)	To be provided by the customer	Used to protect power lines	—
⓮	Noise filter	To be provided by the customer	Used to prevent external noise from power lines	—
⓯	Electromagnetic contactor	To be provided by the customer	Used to turn on and off the servo power and dynamic braking resistors	—

Note 1: Connector sets are also available, rather than separated items. See the respective pages listed above.
Note 2: For the options and peripheral items for Functional Safety models, see page p. 77.

System Configuration

See page p. 77 for the system configuration of Functional Safety models.

800 A

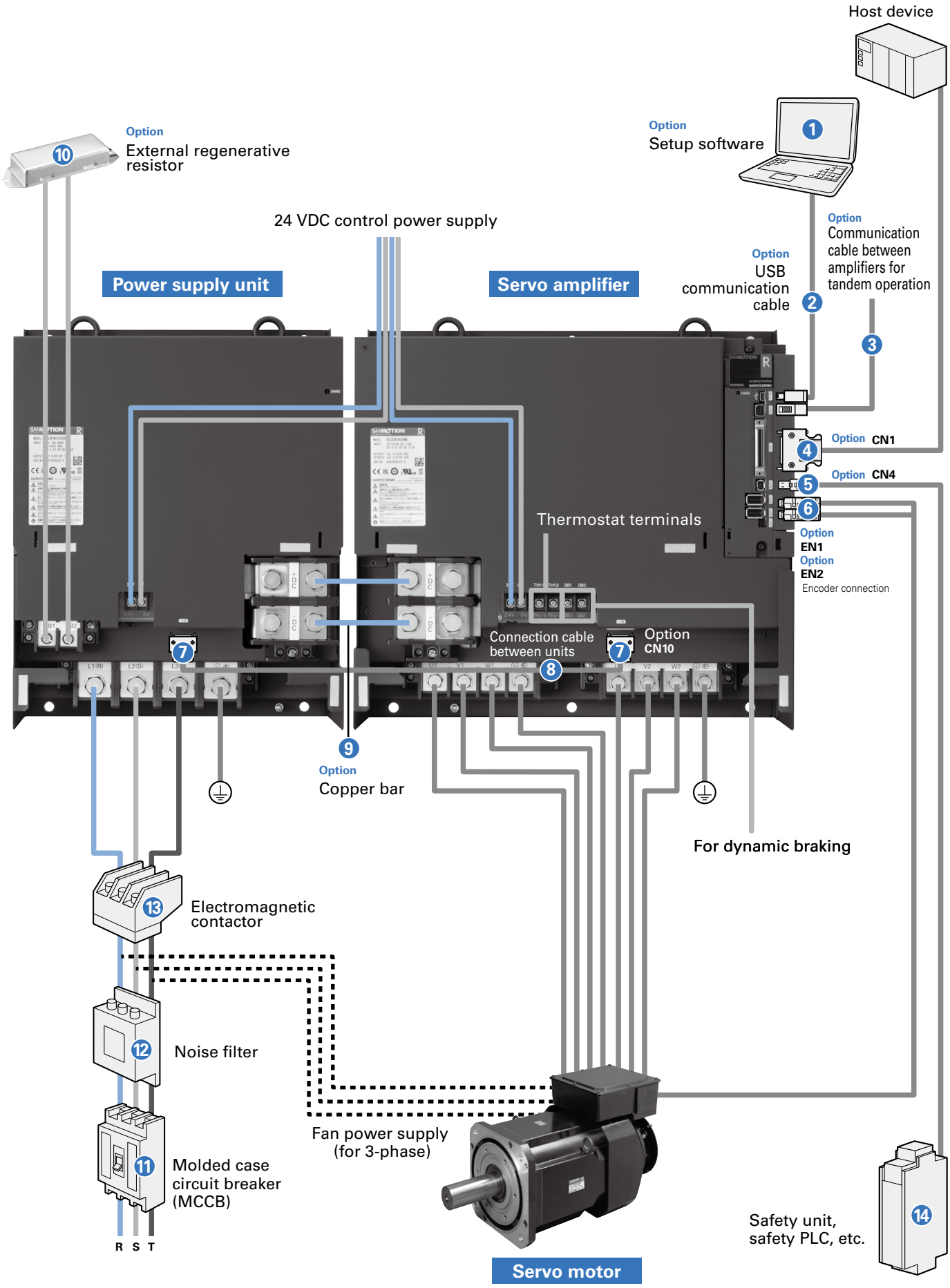

Options and Peripheral Items (800 A)

No.	Name	Model no.	Description	Page
1	Setup software	Can be downloaded from Product Information on our website.	Parameters can be set and monitored via communication with a PC.	p. 100
2	USB cable	AL-00896515-0□	PC cable for setup software	p. 113
3	Communication cable between amplifiers for tandem operation	AL-00911582-0□	Connects between amplifiers for tandem operation (CN5 ⇔ CN5)	p. 113
4	CN1 connector	AL-00385594	For controller connection	p. 103
5	CN4 connector	AL-00849548-02 (for short-circuiting), AL-00718252-01 (for wiring)	For safety device connection (for short-circuiting and wiring) When CN4 is not used, be sure to buy and insert the optional short-circuiting connector to CN4 on the servo amplifier. (For STO models only)	p. 103
6	EN1 connector	AL-00632607	For encoder connection	p. 103
	EN2 connector	AL-00632607	For encoder connection	p. 103
7	CN10 connector	AL-01017659	For unit-to-unit connection (A pair of 2 pieces for the power supply unit side and amplifier unit side)	p. 103
8	Unit-to-unit connection cable	AL-01018354-01	0.5 m cable for connection between power supply unit (CN10) and amplifier unit (CN10) A cable with a connector. CN10 connector AL-01017659 is not required if this is purchased.	p. 113
9	Copper bar	AL-01020858-01	For main power connection between power supply unit and amplifier unit. Between terminals +DC and -DC. (5 mm clearance between units) Set of 2 pcs.	p. 113
10	External regenerative resistor	REGIST-500CW□□B	Used when more regenerative capacity is needed, e.g., high-frequency movements	p. 119
11	Molded case circuit breaker (MCCB)	To be provided by the customer	Used to protect power lines	—
12	Noise filter	To be provided by the customer	Used to prevent external noise from power lines	—
13	Electromagnetic contactor	To be provided by the customer	Used to turn on and off the servo power and dynamic braking resistors	—
14	Safety unit, safety PLC, etc.	To be provided by the customer	Connects I/O signals from the Safe Torque Off function to devices such as a safety unit and safety PLC.	—

Note 1: Connector sets are also available, rather than separated items. See the respective pages listed above.
Note 2: For the options and peripheral items of Functional Safety models, see page p. 77.

General Specifications

Control functions	Position control, speed control, torque control (switched with parameters)	
Control system	IGBT-based, sinusoidal PWM control	
Main circuit power supply	3-phase 380 to 480 VAC (+10, -15%), 50/60 Hz (±3 Hz)	
Control circuit power supply*	24 VDC (±10%)	
Environment	Ambient temperature	0 to +55°C
	Storage temperature	-20 to +65°C
	Operating and storage humidity	90% RH max. (non-condensing)
	Operating altitude	1000 m or lower
	Vibration resistance	4.9 m/s^2
	Impact resistance	19.6 m/s^2
Structure	25 to 100 A: Tray type amplifier with built-in power supply; 150, 300 A: Wall-mount amplifier with built-in power supply; 800 A: Both amplifier unit and power supply unit are wall-mounted	

Safe Torque Off model, Safety model

RoHS

* Servo amplifiers fall under the overvoltage category III according to EN 61800-5-1. For the 24 VDC control circuit power supply and the interface DC power supply, use a DC power supply with reinforced insulation on I/O terminals.

■ Performance

Speed control range	1:5000 (Internal speed command)
Frequency characteristics	2200 Hz (at high-speed sampling mode)
Permissible load moment of inertia	10 times the motor rotary inertia

■ Functions

Protection functions	Overcurrent, current detection error, overload, regeneration error, overheating, external error, overvoltage, main circuit power supply under-voltage main circuit power supply open phase, control circuit power supply undervoltage, encoder error, overspeed, speed control error, speed feedback error, excessive position deviation, position command pulse error, built-in memory error, parameter error, cooling fan error
Digital operator	Status display, monitoring, alarm log, parameter setting, test run, adjustment modes
Dynamic braking	25 to 150 A: Built-in, 300 to 800 A: None
Regenerative resistor	25 to 100 A: Built-in, 150 to 800 A: None Optional external regenerative resistor (compatible with 25 to 800 A).
Monitoring	Speed monitoring (VMON): 2.0 V ±10% (at 1000 min^{-1}), torque (thrust) command monitoring (TCMON): 2.0 V ±10% (at 100%)

■ Safety standards

Servo amplifier type	Safety standards		
RS3□□□A□□□0	North American standards (UL, cUL)		UL 61800-5-1
	European Directive	Low Voltage Directive	IEC/EN 61800-5-1
		EMC Directive	IEC/EN 61800-3, IEC/EN 61326-3-1
	KC Mark (Korea Certification Mark)		KN 61000-6-2, KN 61000-6-4
RS3□□□A□□□2 (STO models) RS3□□□A□□□C (Functional Safety models)	North American safety standards (UL)		UL 61800-5-1
	European Directive	Low Voltage Directive	IEC/EN 61800-5-1
		EMC Directive	IEC/EN 61800-3 IEC/EN 61000-6-2 IEC/EN 61326-1 IEC 61000-6-7 IEC/EN 61000-6-4
	KC Mark (Korea Certification Mark)		KN 61000-6-2, KN 61000-6-4

■ Functional safety specifications

Servo amplifier type			IEC/EN 61800-5-2:2016	Details	Safety level	
RS3□□□A□□□0	RS3□□□A□□□2 (STO models)	RS3□□□A□□□C (Functional Safety models)			EN 61508 IEC/EN 62061	ISO 13849-1:2015 EN ISO 13849-1:2015
–	✓	✓	STO	Safe Torque Off	aSIL3, SILCL3	Cat.3 PL e
–	–	✓	SS1	Safe Stop 1		
–	–	✓	SS2	Safe Stop 2		
–	–	✓	SOS	Safe Operating Stop		
–	–	✓	SLS	Safely-Limited Speed		
–	–	✓	SBC	Safe Brake Control		
–	–	✓	SSM	Safe Speed Monitor		

■ General-purpose output specifications

Sinking (NPN) type

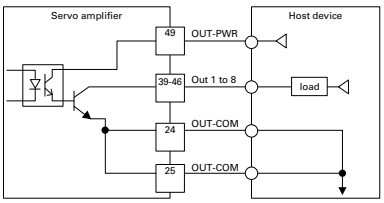

Sourcing (PNP) type

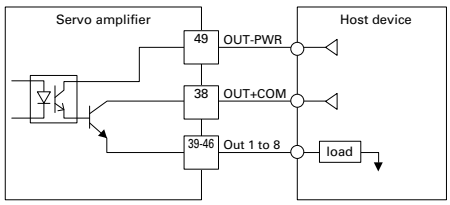

Dimensions (Unit: mm) See page 78 for the dimensional drawings of Functional Safety models.

25 A - Model no.: RS3C02A□A□□, RS3C02A□B□□

Mass: 2.5 kg

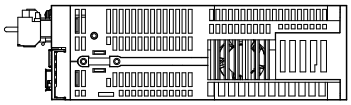

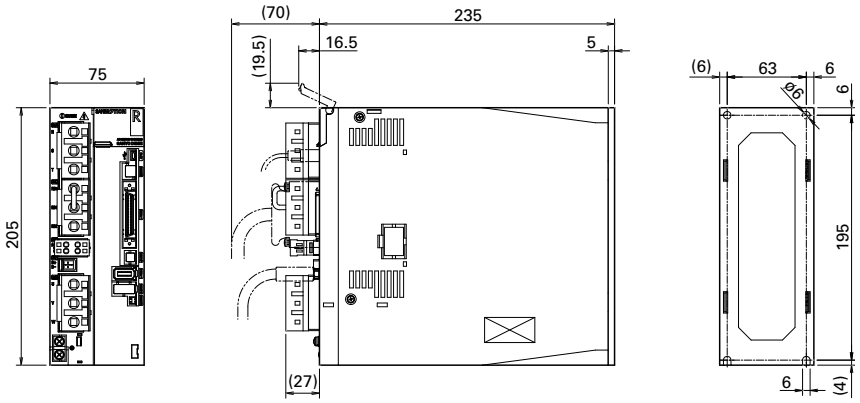

50 A - Model no.: RS3C05A□A□□, RS3C05A□B□□

Mass: 4.7 kg

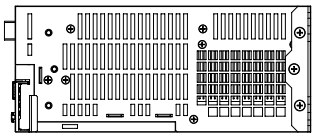

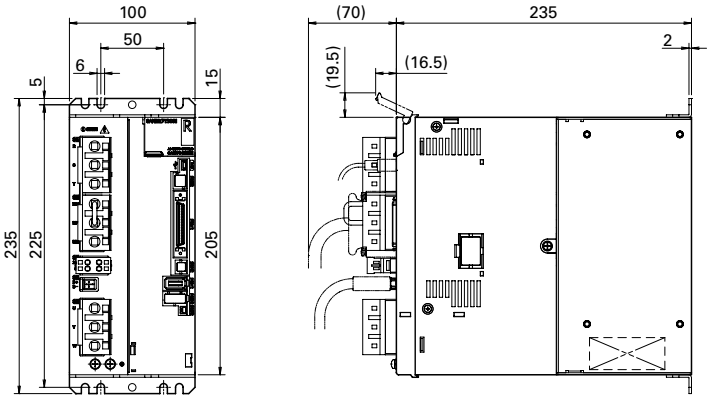

100 A - Model no.: RS3C10A□A□□, RS3C10A□B□□

Mass: 8.5 kg

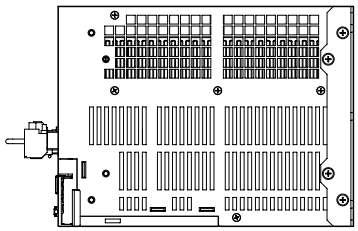

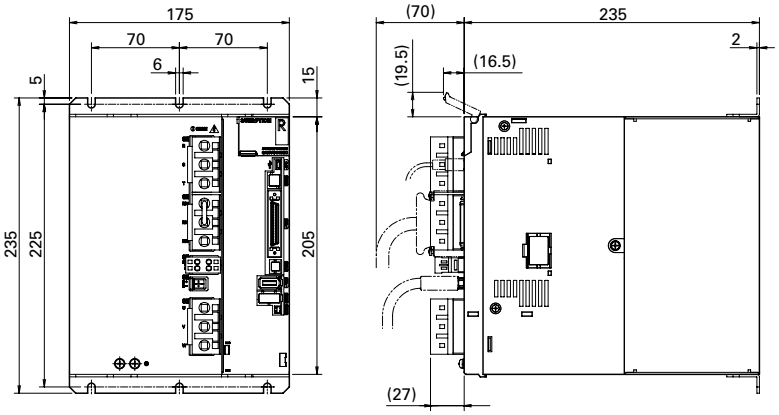

Dimensions (Unit: mm)

150 A - Model no.: RS3C15A□AL□, RS3C15A□BL□

Mass: 11.0 kg
(Functional Safety model: 11.1 kg)

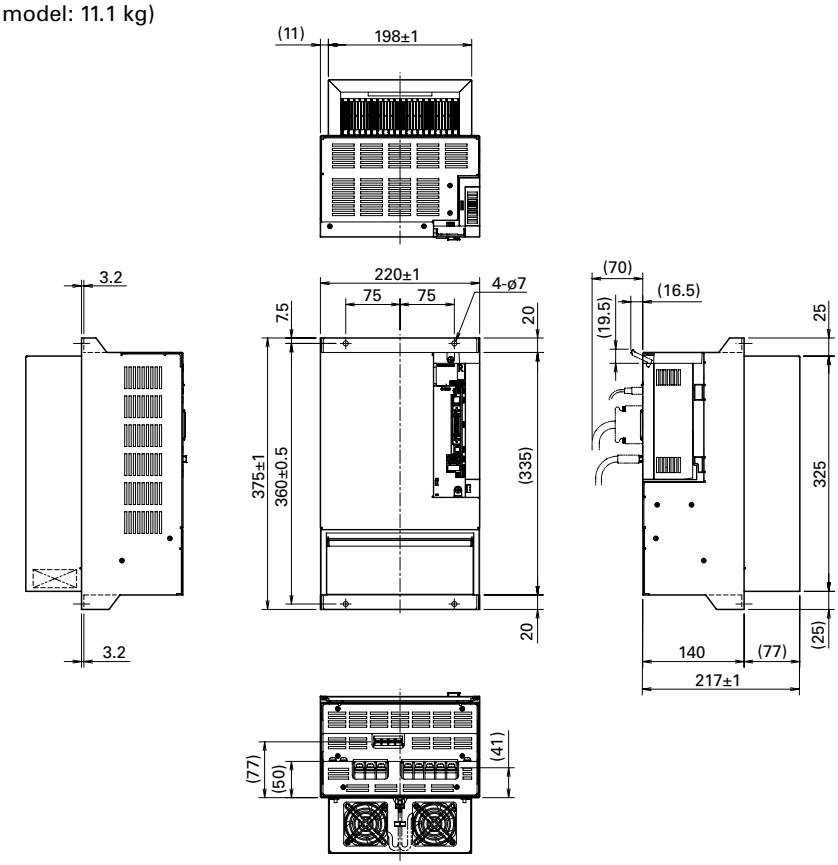

300 A - Model no.: RS3C30A□AM□, RS3C30A□BM□

Mass: 18.0 kg
(Functional Safety model: 18.1 kg)

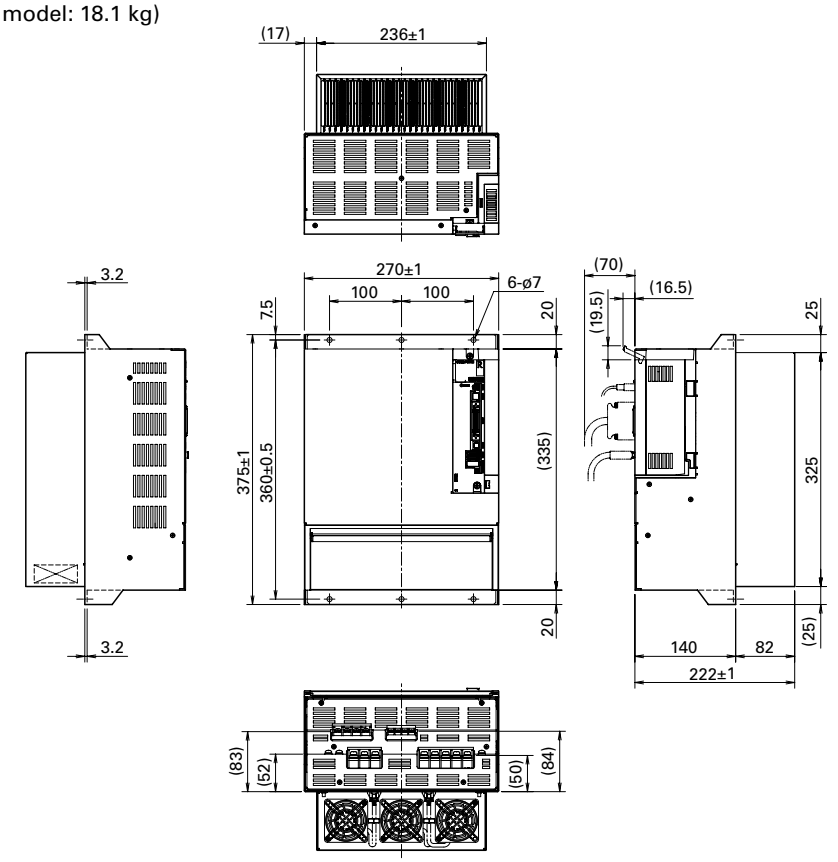

800 A

Amplifier unit model no.: RS3D80A□A□□, RS3D80A□B□□
Mass: 32.5 kg

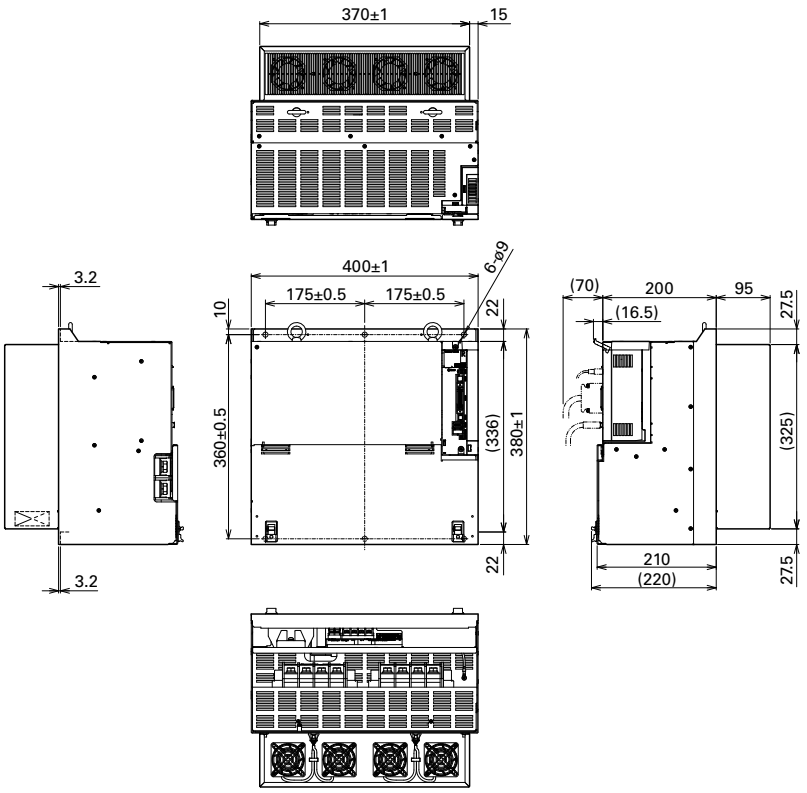

Power supply unit model no.: RS3PAC550
Mass: 23.0 kg

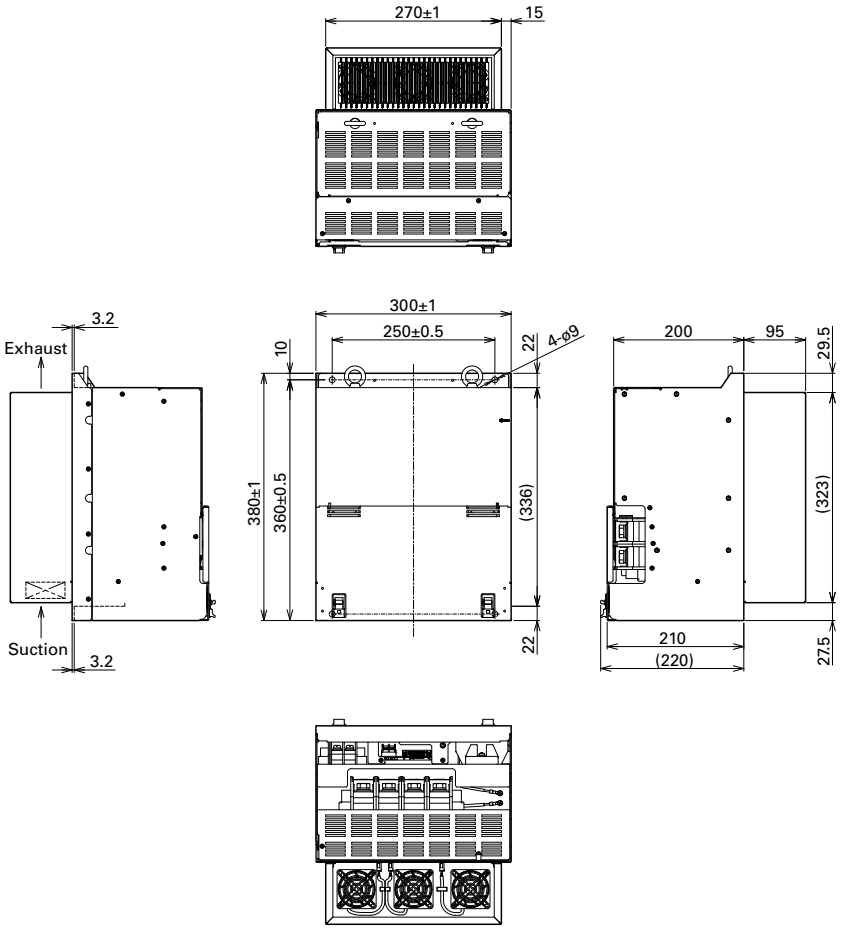

External Wiring Diagram

25 to 100 A Sink type (NPN) output

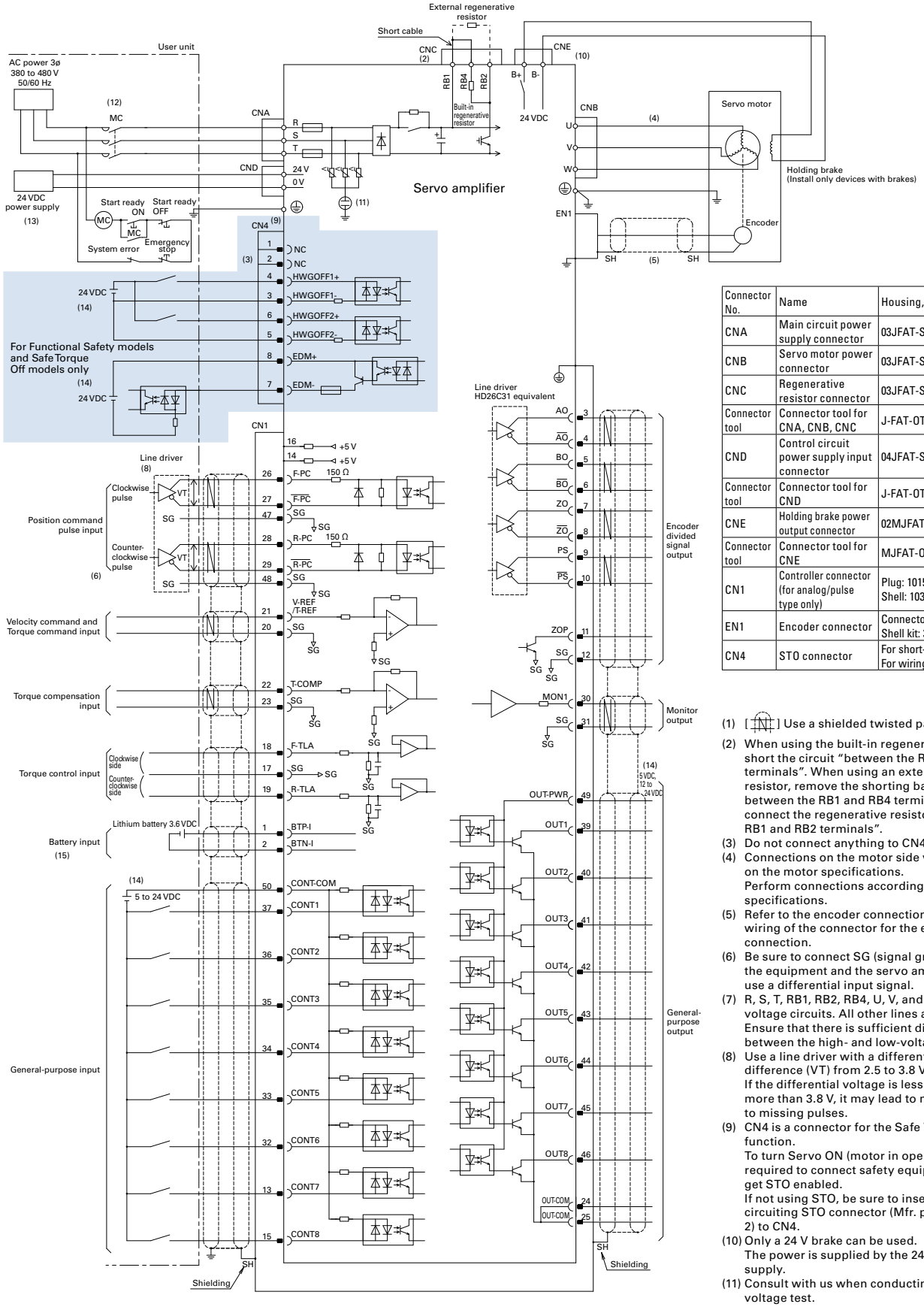

Connector No.	Name	Housing, plug, shell
CNA	Main circuit power supply connector	03JFAT-SAXGDK-P15
CNB	Servo motor power connector	03JFAT-SAZGDK-P15
CNC	Regenerative resistor connector	03JFAT-SAYGDK-P15
Connector tool	Connector tool for CNA, CNB, CNC	J-FAT-OT-P
CND	Control circuit power supply input connector	04JFAT-SAGG-G-KK
Connector tool	Connector tool for CND	J-FAT-OT(N)
CNE	Holding brake power output connector	02MJFAT-SAGF
Connector tool	Connector tool for CNE	MJFAT-OT
CN1	Controller connector (for analog/pulse type only)	Plug: 10150-3000PE Shell: 10350-52A0-008
EN1	Encoder connector	Connector: 36210-0100PL Shell kit: 36310-3200-008
CN4	STO connector	For short-circuiting: 1971153-2 For wiring: 2013595-3

(1) [ ] Use a shielded twisted pair cable.
(2) When using the built-in regenerative resistor, short the circuit "between the RB1 and RB4 terminals". When using an external regenerative resistor, remove the shorting bar connected between the RB1 and RB4 terminals and then connect the regenerative resistor "between the RB1 and RB2 terminals".
(3) Do not connect anything to CN4 pin 1 and 2.
(4) Connections on the motor side vary depending on the motor specifications.
Perform connections according to the motor specifications.
(5) Refer to the encoder connection figure for the wiring of the connector for the encoder connection.
(6) Be sure to connect SG (signal ground) between the equipment and the servo amplifier when you use a differential input signal.
(7) R, S, T, RB1, RB2, RB4, U, V, and W are high-voltage circuits. All other lines are low-voltage. Ensure that there is sufficient differential between the high- and low-voltage circuits.
(8) Use a line driver with a differential voltage difference (VT) from 2.5 to 3.8 V.
If the differential voltage is less than 2.5 V or more than 3.8 V, it may lead to malfunction due to missing pulses.
(9) CN4 is a connector for the Safe Torque Off function.
To turn Servo ON (motor in operation), it is required to connect safety equipment to CN4 and get STO enabled.
If not using STO, be sure to insert the short-circuiting STO connector (Mfr. part no.: 1971153-2) to CN4.
(10) Only a 24 V brake can be used.
The power is supplied by the 24 VDC power supply.
(11) Consult with us when conducting a withstand voltage test.
(12) An earth leakage circuit breaker conforming either to UL, IEC, or EN standards is recommended.
(13) For the 24 VDC power supply, use a safety extra low voltage (SELV) power supply with reinforced insulation on I/O terminals.
(14) The external power supply is to be arranged by the customer.
(15) No wiring is required when using the battery-less absolute encoder.

25 to 100 A Source type (PNP) output

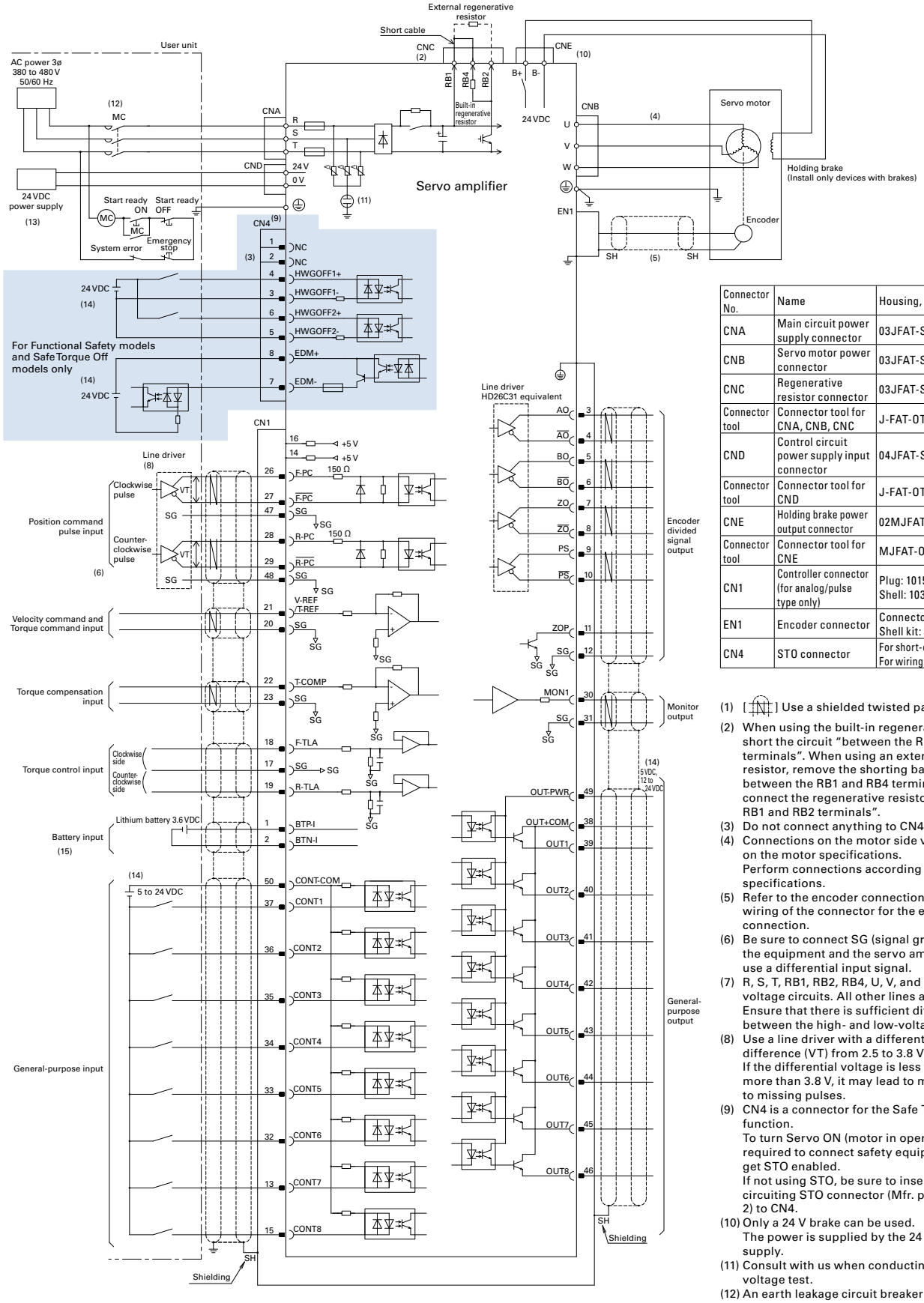

Connector No.	Name	Housing, plug, shell
CNA	Main circuit power supply connector	03JFAT-SAXGDK-P15
CNB	Servo motor power connector	03JFAT-SAZGDK-P15
CNC	Regenerative resistor connector	03JFAT-SAYGDK-P15
Connector tool	Connector tool for CNA, CNB, CNC	J-FAT-OT-P
CND	Control circuit power supply input connector	04JFAT-SAGG-G-KK
Connector tool	Connector tool for CND	J-FAT-OT(N)
CNE	Holding brake power output connector	02MJFAT-SAGF
Connector tool	Connector tool for CNE	MJFAT-OT
CN1	Controller connector (for analog/pulse type only)	Plug: 10150-3000PE Shell: 10350-52A0-008
EN1	Encoder connector	Connector: 36210-0100PL Shell kit: 36310-3200-008
CN4	STO connector	For short-circuiting: 1971153-2 For wiring: 2013595-3

(1) [ ] Use a shielded twisted pair cable.
(2) When using the built-in regenerative resistor, short the circuit "between the RB1 and RB4 terminals". When using an external regenerative resistor, remove the shorting bar connected between the RB1 and RB2 terminals and then connect the regenerative resistor "between the RB1 and RB2 terminals".
(3) Do not connect anything to CN4 pin 1 and 2.
(4) Connections on the motor side vary depending on the motor specifications.
Perform connections according to the motor specifications.
(5) Refer to the encoder connection figure for the wiring of the connector for the encoder connection.
(6) Be sure to connect SG (signal ground) between the equipment and the servo amplifier when you use a differential input signal.
(7) R, S, T, RB1, RB2, RB4, U, V, and W are high-voltage circuits. All other lines are low-voltage. Ensure that there is sufficient differential between the high- and low-voltage circuits.
(8) Use a line driver with a differential voltage difference (VT) from 2.5 to 3.8 V.
If the differential voltage is less than 2.5 V or more than 3.8 V, it may lead to malfunction due to missing pulses.
(9) CN4 is a connector for the Safe Torque Off function.
To turn Servo ON (motor in operation), it is required to connect safety equipment to CN4 and get STO enabled.
If not using STO, be sure to insert the short-circuiting STO connector (Mfr. part no.: 1971153-2) to CN4.
(10) Only a 24 V brake can be used.
The power is supplied by the 24 VDC power supply.
(11) Consult with us when conducting a withstand voltage test.
(12) An earth leakage circuit breaker conforming either to UL, IEC, or EN standards is recommended.
(13) For the 24 VDC power supply, use a safety extra low voltage (SELV) power supply with reinforced insulation on I/O terminals.
(14) The external power supply is to be arranged by the customer.
(15) No wiring is required when using the battery-less absolute encoder.

External Wiring Diagram

150, 300 A Sink type (NPN) output

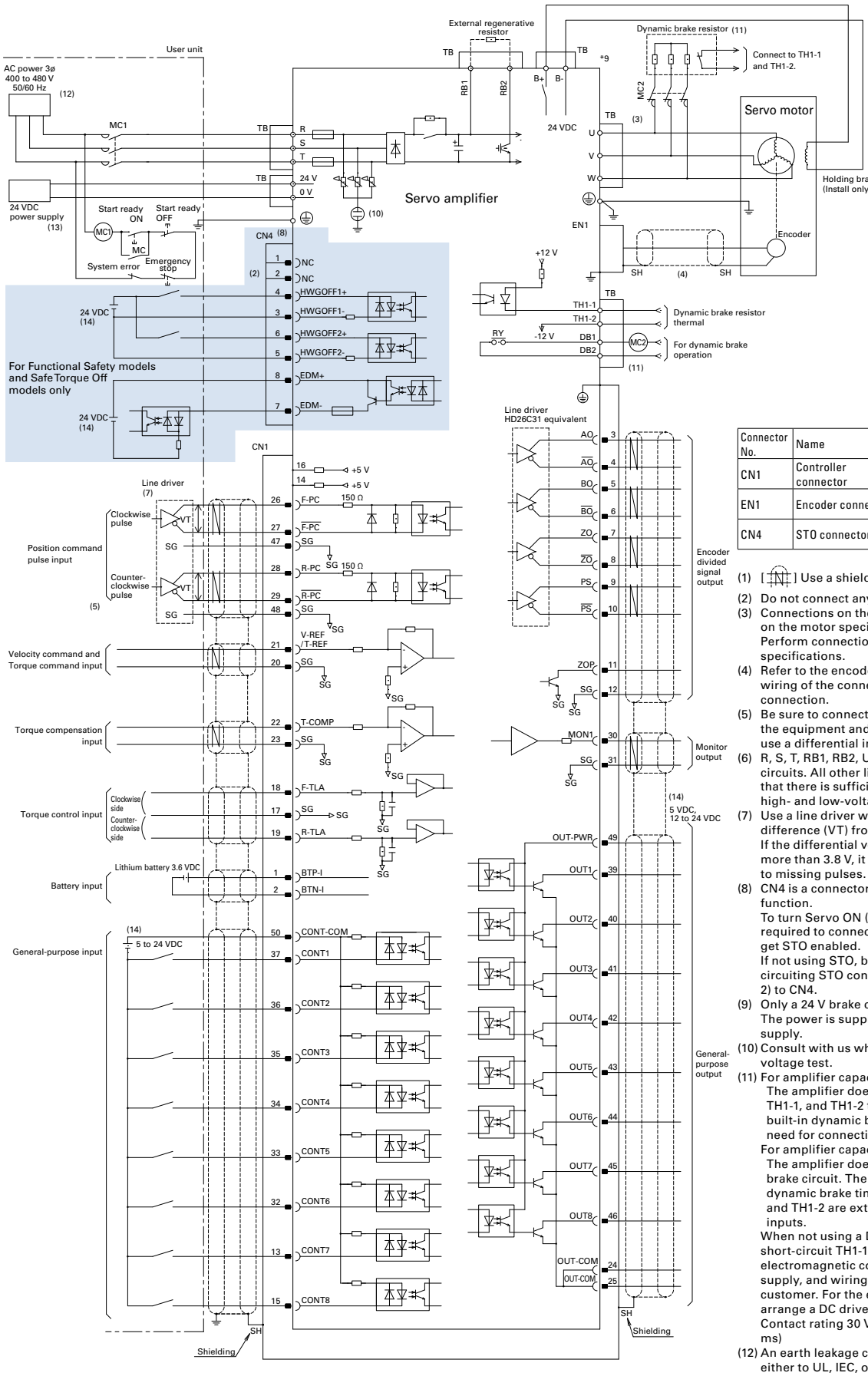

Connector No.	Name	Housing, plug, shell
CN1	Controller connector	Plug: 10150-3000PE Shell: 10350-52A0-008
EN1	Encoder connector	Connector: 36210-0100PL Shell kit: 36310-3200-008
CN4	STO connector	For short-circuiting: 1971153-2 For wiring: 2013595-3

(1) [ ] Use a shielded twisted pair cable.
(2) Do not connect anything to CN4 pin 1 and 2.
(3) Connections on the motor side vary depending on the motor specifications.
Perform connections according to the motor specifications.
(4) Refer to the encoder connection figure for the wiring of the connector for the encoder connection.
(5) Be sure to connect SG (signal ground) between the equipment and the servo amplifier when you use a differential input signal.
(6) R, S, T, RB1, RB2, U, V, and W are high-voltage circuits. All other lines are low-voltage. Ensure that there is sufficient differential between the high- and low-voltage circuits.
(7) Use a line driver with a differential voltage difference (VT) from 2.5 to 3.8 V.
If the differential voltage is less than 2.5 V or more than 3.8 V, it may lead to malfunction due to missing pulses.
(8) CN4 is a connector for the Safe Torque Off function.
To turn Servo ON (motor in operation), it is required to connect safety equipment to CN4 and get STO enabled.
If not using STO, be sure to insert the short-circuiting STO connector (Mfr. part no.: 1971153-2) to CN4.
(9) Only a 24 V brake can be used.
The power is supplied by the 24 VDC power supply.
(10) Consult with us when conducting a withstand voltage test.
(11) For amplifier capacity 150 A:
The amplifier does not have the DB1, DB2, TH1-1, and TH1-2 terminals. The amplifier has a built-in dynamic brake circuit, so there is no need for connecting external DB resistors.
For amplifier capacity 300 A:
The amplifier does not have a built-in dynamic brake circuit. The DB1 and DB2 are external dynamic brake timing outputs, and the TH1-1 and TH1-2 are external DB resistor thermostat inputs.
When not using a DB resistor thermostat, short-circuit TH1-1 and TH1-2. The electromagnetic contactor, resistor, power supply, and wiring are to be arranged by the customer. For the electromagnetic contactor, arrange a DC drive type.
Contact rating 30 VDC, 2 A (COSø = 0.4, L/R = 7 ms)
(12) An earth leakage circuit breaker conforming either to UL, IEC, or EN standards is recommended.
(13) For the 24 VDC power supply, use a safety extra low voltage (SELV) power supply with reinforced insulation on I/O terminals.
(14) The external power supply is to be arranged by the customer.

150, 300 A Source type (PNP) output

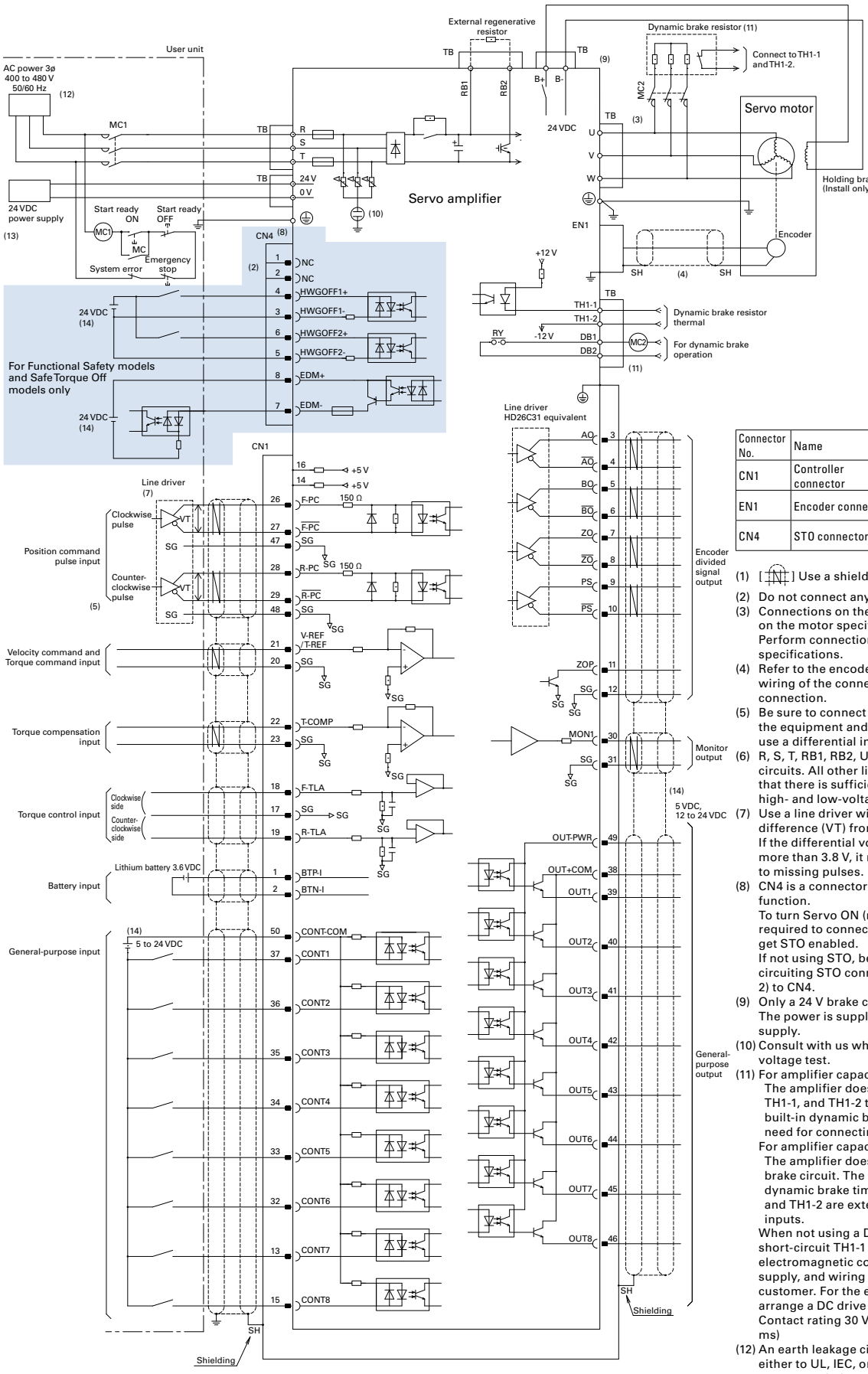

Connector No.	Name	Housing, plug, shell
CN1	Controller connector	Plug: 10150-3000PE Shell: 10350-52A0-008
EN1	Encoder connector	Connector: 36210-0100PL Shell kit: 36310-3200-008
CN4	STO connector	For short-circuiting: 1971153-2 For wiring: 2013595-3

(1) [ ] Use a shielded twisted pair cable.
(2) Do not connect anything to CN4 pin 1 and 2.
(3) Connections on the motor side vary depending on the motor specifications.
Perform connections according to the motor specifications.
(4) Refer to the encoder connection figure for the wiring of the connector for the encoder connection.
(5) Be sure to connect SG (signal ground) between the equipment and the servo amplifier when you use a differential input signal.
(6) R, S, T, RB1, RB2, U, V, and W are high-voltage circuits. All other lines are low-voltage. Ensure that there is sufficient differential between the high- and low-voltage circuits.
(7) Use a line driver with a differential voltage difference (VT) from 2.5 to 3.8 V.
If the differential voltage is less than 2.5 V or more than 3.8 V, it may lead to malfunction due to missing pulses.
(8) CN4 is a connector for the Safe Torque Off function.
To turn Servo ON (motor in operation), it is required to connect safety equipment to CN4 and get STO enabled.
If not using STO, be sure to insert the short-circuiting STO connector (Mfr. part no.: 1971153-2) to CN4.
(9) Only a 24 V brake can be used.
The power is supplied by the 24 VDC power supply.
(10) Consult with us when conducting a withstand voltage test.
(11) For amplifier capacity 150 A:
The amplifier does not have the DB1, DB2, TH1-1, and TH1-2 terminals. The amplifier has a built-in dynamic brake circuit, so there is no need for connecting external DB resistors.
For amplifier capacity 300 A:
The amplifier does not have a built-in dynamic brake circuit. The DB1 and DB2 are external dynamic brake timing outputs, and the TH1-1 and TH1-2 are external DB resistor thermostat inputs.
When not using a DB resistor thermostat, short-circuit TH1-1 and TH1-2. The electromagnetic contactor, resistor, power supply, and wiring are to be arranged by the customer. For the electromagnetic contactor, arrange a DC drive type.
Contact rating 30 VDC, 2 A (COSø = 0.4, L/R = 7 ms)
(12) An earth leakage circuit breaker conforming either to UL, IEC, or EN standards is recommended.
(13) For the 24 VDC power supply, use a safety extra low voltage (SELV) power supply with reinforced insulation on I/O terminals.
(14) The external power supply is to be arranged by the customer.

External Wiring Diagram

800 A Sink type (NPN) output

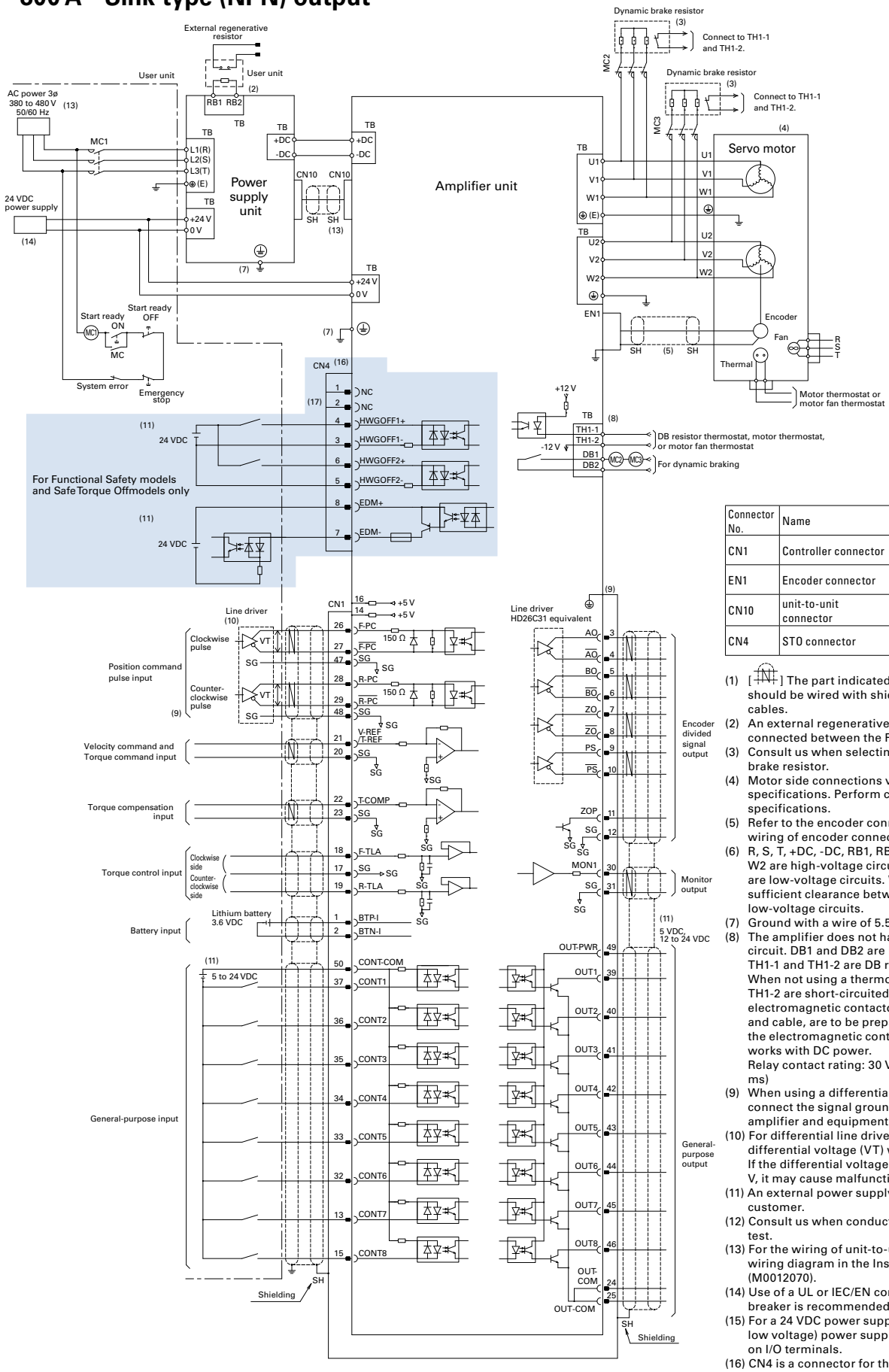

Connector No.	Name	Housing, plug, shell
CN1	Controller connector	Plug: 10150-3000PE Shell: 10350-52A0-008
EN1	Encoder connector	Connector: 36210-0100PL Shell kit: 36310-3200-008
CN10	unit-to-unit connector	Housing: DF02P036A22 Shell: DF02P036F22A1
CN4	STO connector	For short-circuiting: 1971153-2 For wiring: 2013595-3

(1) [ ] The part indicated by the figure on the left should be wired with shielded twisted pair (STP) cables.
(2) An external regenerative resistor should be connected between the RB1 and RB2 terminals.
(3) Consult us when selecting an external dynamic brake resistor.
(4) Motor side connections vary depending on motor specifications. Perform connections according to the specifications.
(5) Refer to the encoder connection diagram for the wiring of encoder connectors.
(6) R, S, T, +DC, -DC, RB1, RB2, U1, V1, W1, U2, V2, and W2 are high-voltage circuits. All other signal lines are low-voltage circuits. When wiring, provide sufficient clearance between high-voltage and low-voltage circuits.
(7) Ground with a wire of 5.5 mm² or larger size.
(8) The amplifier does not have a built-in dynamic brake circuit. DB1 and DB2 are DB timing outputs, and TH1-1 and TH1-2 are DB resistor thermostat inputs. When not using a thermostat, ensure that TH1-1 and TH1-2 are short-circuited. Necessary items, an electromagnetic contactor, resistor, power supply, and cable, are to be prepared by the customer. For the electromagnetic contactor, prepare one that works with DC power.
Relay contact rating: 30 VDC, 2 A (cosø = 0.4, L/R = 7 ms)
(9) When using a differential input signal, be sure to connect the signal ground (SG) between the servo amplifier and equipment.
(10) For differential line drivers, use one with a differential voltage (VT) within 2.5 to 3.8 V.
If the differential voltage is below 2.5 V or above 3.8 V, it may cause malfunction due to missing pulses.
(11) An external power supply is to be prepared by the customer.
(12) Consult us when conducting a withstand voltage test.
(13) For the wiring of unit-to-unit cables, refer to the wiring diagram in the Instruction Manual (M0012070).
(14) Use of a UL or IEC/EN compliant leakage circuit breaker is recommended.
(15) For a 24 VDC power supply, use a SELV (safety extra low voltage) power supply with reinforced insulation on I/O terminals.
(16) CN4 is a connector for the Safe Torque Off function. Turning Servo ON (motor in operation) requires to connect a safety device to CN4 and get STO enabled. When not using STO, be sure to insert the short-circuiting STO connector (Mfr. part no.: 1971153-2) to CN4.
(17) Do not connect anything to the CN4-1 or CN4-2 pins.

800 A Source type (PNP) output

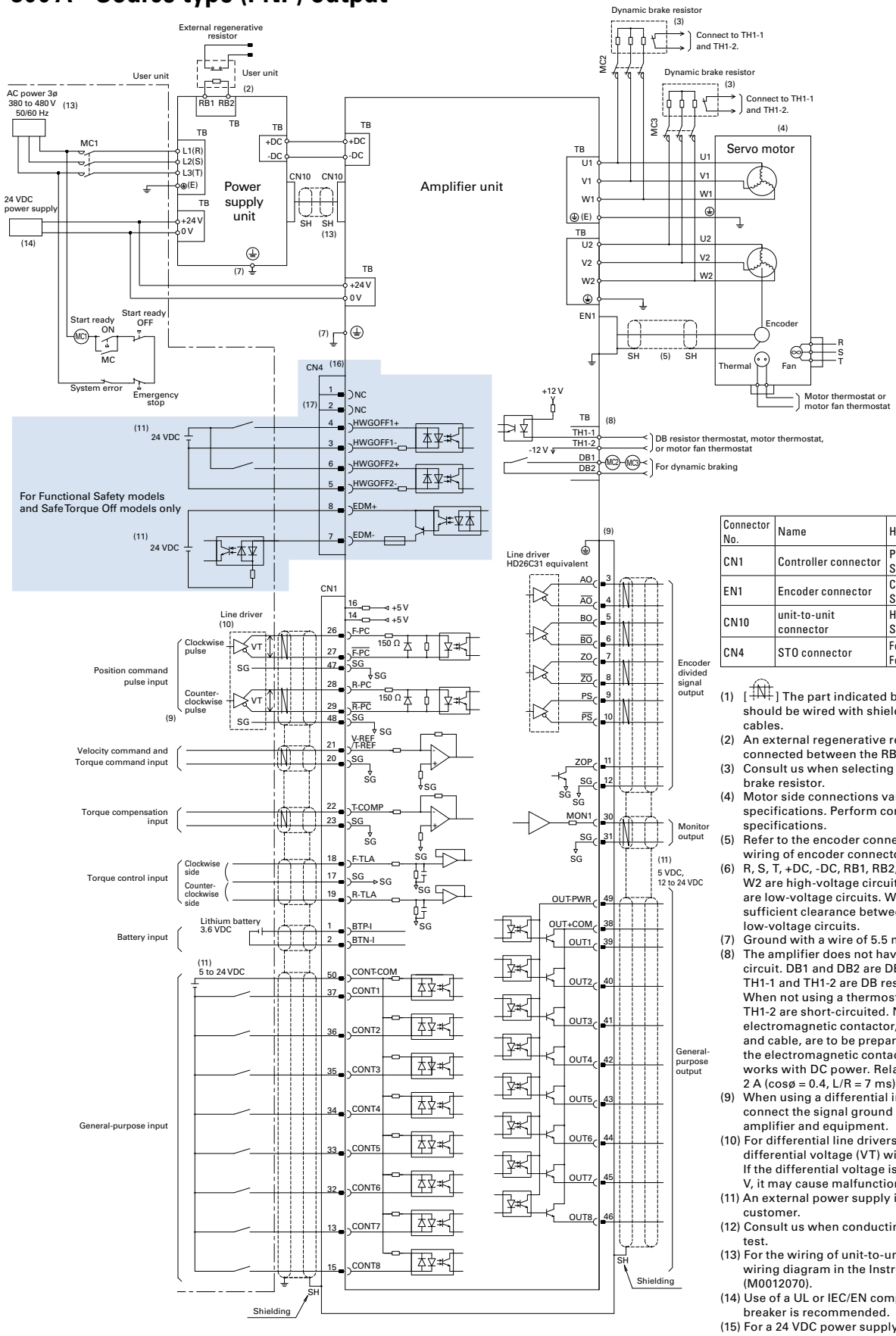

Connector No.	Name	Housing, plug, shell
CN1	Controller connector	Plug: 10150-3000PE Shell: 10350-52A0-008
EN1	Encoder connector	Connector: 36210-0100PL Shell kit: 36310-3200-008
CN10	unit-to-unit connector	Housing: DF02P036A22 Shell: DF02P036F22A1
CN4	STO connector	For short-circuiting: 1971153-2 For wiring: 2013595-3

(1) [ ] The part indicated by the figure on the left should be wired with shielded twisted pair (STP) cables.
(2) An external regenerative resistor should be connected between the RB1 and RB2 terminals.
(3) Consult us when selecting an external dynamic brake resistor.
(4) Motor side connections vary depending on motor specifications. Perform connections according to the specifications.
(5) Refer to the encoder connection diagram for the wiring of encoder connectors.
(6) R, S, T, +DC, -DC, RB1, RB2, U1, V1, W1, U2, V2, and W2 are high-voltage circuits. All other signal lines are low-voltage circuits. When wiring, provide sufficient clearance between high-voltage and low-voltage circuits.
(7) Ground with a wire of 5.5 mm² or larger size.
(8) The amplifier does not have a built-in dynamic brake circuit. DB1 and DB2 are DB timing outputs, and TH1-1 and TH1-2 are DB resistor thermostat inputs. When not using a thermostat, ensure that TH1-1 and TH1-2 are short-circuited. Necessary items, an electromagnetic contactor, resistor, power supply, and cable, are to be prepared by the customer. For the electromagnetic contactor, prepare one that works with DC power. Relay contact rating: 30 VDC, 2 A (cosø = 0.4, L/R = 7 ms)
(9) When using a differential input signal, be sure to connect the signal ground (SG) between the servo amplifier and equipment.
(10) For differential line drivers, use one with a differential voltage (VT) within 2.5 to 3.8 V. If the differential voltage is below 2.5 V or above 3.8 V, it may cause malfunction due to missing pulses.
(11) An external power supply is to be prepared by the customer.
(12) Consult us when conducting a withstand voltage test.
(13) For the wiring of unit-to-unit cables, refer to the wiring diagram in the Instruction Manual (M0012070).
(14) Use of a UL or IEC/EN compliant leakage circuit breaker is recommended.
(15) For a 24 VDC power supply, use a SELV (safety extra low voltage) power supply with reinforced insulation on I/O terminals.
(16) CN4 is a connector for the Safe Torque Off function. Turning Servo ON (motor in operation) requires to connect a safety device to CN4 and get STO enabled. When not using STO, be sure to insert the short-circuiting STO connector (Mfr. part no.: 1971153-2) to CN4.
(17) Do not connect anything to the CN4-1 or CN4-2 pins.

Precautions when Replacing Our Conventional Products

For analog/pulse type

■ Position command pulse input

The SANMOTION R 3E Model series amplifiers are not compatible with some of position command pulse signals. Furthermore, using an open collector output requires wiring change.

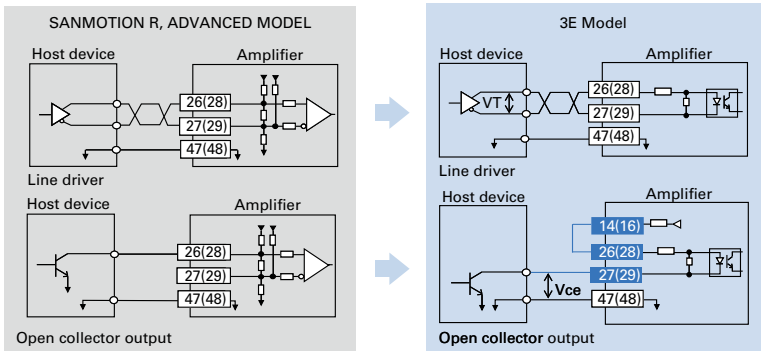

Host controller's pulse output circuit	Wiring compatibility	Requirement
Differential output type (line driver)	Yes	Voltage difference between differential signals (VT): 2.5 to 3.8 V
Open collector type	No	Transistor's saturation voltage (Vce): 1.5 V or less

■ General-purpose input

For the SANMOTION R 3E Model series, differential (line driver) output cannot be used as the output circuit on the host controller side. Also, wiring change will be required if the open collector output is used.

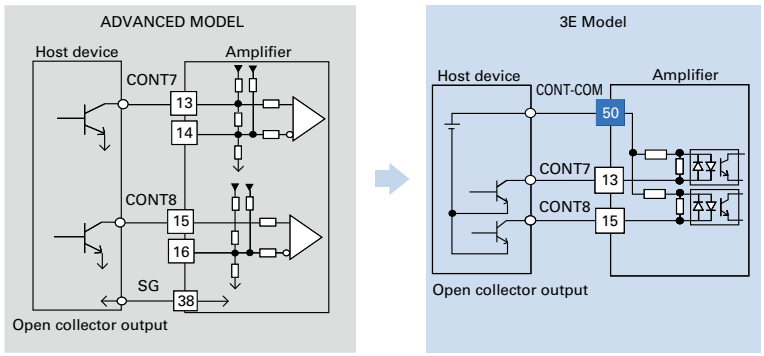

Host controller's general-purpose output circuit	Wiring compatibility	Requirement
Differential output type (line driver)	–	Please change to the open collector type.
Open collector type	No (See the diagram on the left)	Perform wiring in the same manner as CONT1 to 6.

■ Setup Software

The setup software for the SANMOTION R 3E Model series is SANMOTION MOTOR SETUP SOFTWARE.
The software is available for download from our website.
Beware that the SANMOTION R Setup Software cannot be used.
For the communication cable, use an optional or commercially available USB cable (with USB Mini-B connector on the servo amplifier side).

Servo Amplifier

R 3E Model EtherCAT interface type

Amplifier capacity: 25 to 800 A



More evolved AC servo amplifiers that provide improved basic performance including high responsiveness, and are more eco-efficient and easier to use.
With a 62.5 μs minimum communication cycle, the high-speed EtherCAT fieldbus subdivides commands, realizing smoother operation of devices.

■ How to Read Model Numbers

Note that not all possible combinations of field values may yield valid products. Also, some of the values listed below are for options. Refer to the "Standard Model Number List" section for model numbers of standard products.

Servo amplifier

RS3 C 02 A 2 H A 4

Option 2

Code	Safe Torque Off function	Functional Safety
4	✓ (with delay circuit)	—
E	✓ (with delay circuit)	✓

Option 1

Code	Specifications	Amp. capacity
A	With built-in regenerative resistor & With DB resistor	25 to 100 A
L	Without built-in regenerative resistor (option: external) & With DB resistor	150 A
M	Without built-in regenerative resistor (option: external) & Without DB resistor	300 A, 800 A

Note: The 800 A amplifier's regenerative resistor is to be connected to a 55 kW power supply unit.

Interface

Code	Specifications
H	EtherCAT

Encoder connection type

Code	EN1 (Motor encoder)	EN2 (Motor encoder or external encoder)
2	Absolute encoder	Incremental encoder for motor / External incremental encoder for fully closed-loop systems
9	Incremental encoder	Absolute encoder
A	Incremental encoder	External incremental encoder for fully closed-loop systems

Servo motor type

Code	Specifications
A	Rotary motor

Servo amplifier capacity

Code	Specifications
02	25 A
05	50 A
10	100 A
15	150 A
30	300 A
80	800 A

Input voltage

Code	Specifications
C	Main 400 VAC /control 24 VDC
D*	Main 560 VDC /control 24 VDC

* Applies to 800 A only. The combination power supply unit's input voltage is 400 VAC.

3E Model series

Power supply unit for 800 A amplifier

RS3PA C 550

Rated output
550 ···55 kW

Input voltage
C ···400 VAC / control 24 VDC

Power supply unit for the 3E Model series

System Configuration

See page 77 for the system configuration of Functional Safety models.

25 to 100 A

The photo shows a 25 A model.

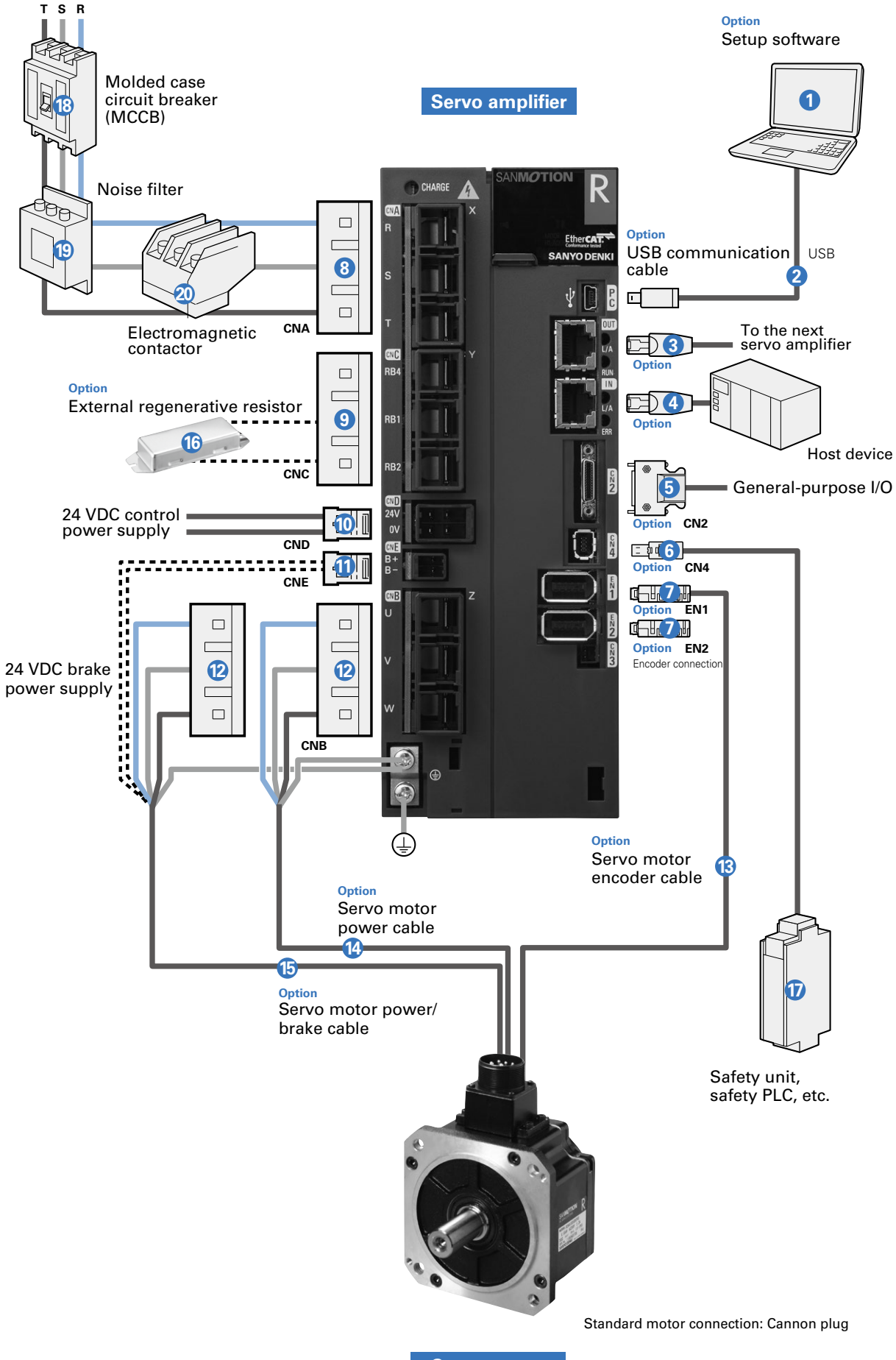

Options and Peripheral Items (25 to 100 A)

No.	Name	Model no.	Description	Page
❶	Setup software	Can be downloaded from Product Information on our website.	Parameters can be set and monitored via communication with a PC.	p. 100
❷	USB cable	AL-00896515-0□	PC cable for setup software	p. 113
❸	OUT connector	To be provided by the customer	EtherCAT OUT (to next amplifier)	—
❹	IN connector	To be provided by the customer	EtherCAT IN (from host controller)	—
❺	CN2 connector	AL-00842383	For general-purpose I/O	p. 104
❻	CN4 connector	AL-00718252-01	For safety device connection When CN4 is not used, be sure to insert the included short-circuiting connector to CN4 on the servo amplifier.	p. 104
❼	EN1 connector	AL-00530312-01	For encoder connection	p. 104
	EN2 connector	AL-00530312-01	For encoder connection	p. 104
❽	CNA connector*	AL-00953863-01	For main circuit power supply connection One will be included with a servo amplifier.	p. 104
❾	CNC connector*	AL-00953864-01	For regenerative resistor connection One will be included with a servo amplifier.	p. 104
❿	CND connector*	AL-00961843-01	For control circuit power supply connection One will be included with a servo amplifier.	p. 104
⓫	CNE connector*	AL-00953867-01	For brake connection	p. 104
⓬	CNB connector*	AL-00953865-01	For servo motor connection One will be included with a servo amplifier.	p. 104
⓭	Servo motor cables	AL-00937694-□□	Encoder cable	p. 116
⓮		AL-0096□□□□-□□	Power cable	p. 114
⓯		AL-0096□□□□-□□	Power/brake cable	p. 114
⓰	External regenerative resistor	REGIST-500CW□□B	Used when more regenerative capacity is needed, e.g., high-frequency movements	p. 119
⓱	Safety unit, safety PLC, etc.	To be provided by the customer	Connects I/O signals from the Safe Torque Off function to devices such as a safety unit and safety PLC.	—
⓲	Molded case circuit breaker (MCCB)	To be provided by the customer	Used to protect power lines	—
⓳	Noise filter	To be provided by the customer	Used to prevent external noise from power lines	—
⓴	Electromagnetic contactor	To be provided by the customer	Used to switch the power on and off.	—

* Wiring on the CNA to CNE connectors requires a connector tool. → p. 104

Note 1: Connector sets are also available, rather than separated items. See the respective pages listed above.
Note 2: For the options and peripheral items for Functional Safety models, see page 77.

System Configuration

See page p. 77 for the system configuration of Functional Safety models.

150, 300 A

The photo shows a 300 A model.

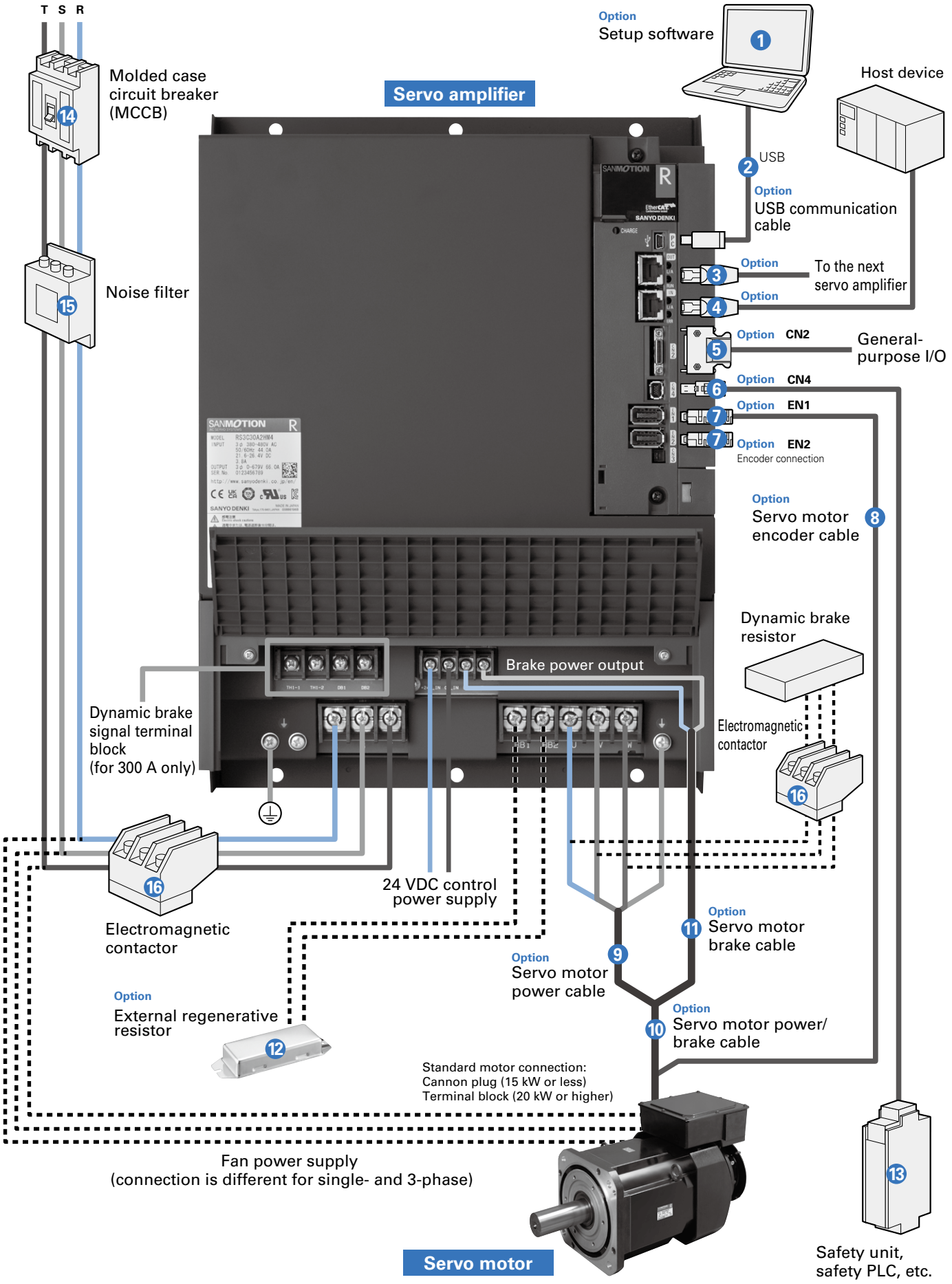

Options and Peripheral Items (150 A, 300 A)

No.	Name	Model no.	Description	Page
1	Setup software	Can be downloaded from Product Information on our website.	Parameters can be set and monitored via communication with a PC.	p. 100
2	USB cable	AL-00896515-0□	PC cable for setup software	p. 113
3	OUT connector	To be provided by the customer	EtherCAT OUT (to next amplifier)	—
4	IN connector	To be provided by the customer	EtherCAT IN (from host controller)	—
5	CN2 connector	AL-00842383	For general-purpose I/O	p. 105
6	CN4 connector	AL-00718252-01	For safety device connection When CN4 is not used, be sure to insert the included short-circuiting connector to CN4 on the servo amplifier.	p. 105
7	EN1 connector	AL-00530312-01	For encoder connection	p. 105
	EN2 connector	AL-00530312-01	For encoder connection	p. 105
8	Servo motor cables	AL-009□□□□□-□□	Encoder cable	p. 116
9		AL-009□□□□□-□□	Power cable	pp. 114 to 115
10		AL-009□□□□□-□□	Power/brake cable	pp. 114 to 115
11		AL-009□□□□□-□□	Brake cable	p. 117
12	External regenerative resistor	REGIST-500CW□□B	Used when more regenerative capacity is needed, e.g., high-frequency movements	p. 119
13	Safety unit, safety PLC, etc.	To be provided by the customer	Connects I/O signals from the Safe Torque Off function to devices such as a safety unit and safety PLC.	—
14	Molded case circuit breaker (MCCB)	To be provided by the customer	Used to protect power lines	—
15	Noise filter	To be provided by the customer	Used to prevent external noise from power lines	—
16	Electromagnetic contactor	To be provided by the customer	Used to turn on and off the servo power and dynamic braking resistors	—

Note 1: Connector sets are also available, rather than separated items. See the respective pages listed above.
Note 2: For the options and peripheral items for Functional Safety models, see page 77.

System Configuration

See page 77 for the system configuration of Functional Safety models.

800 A

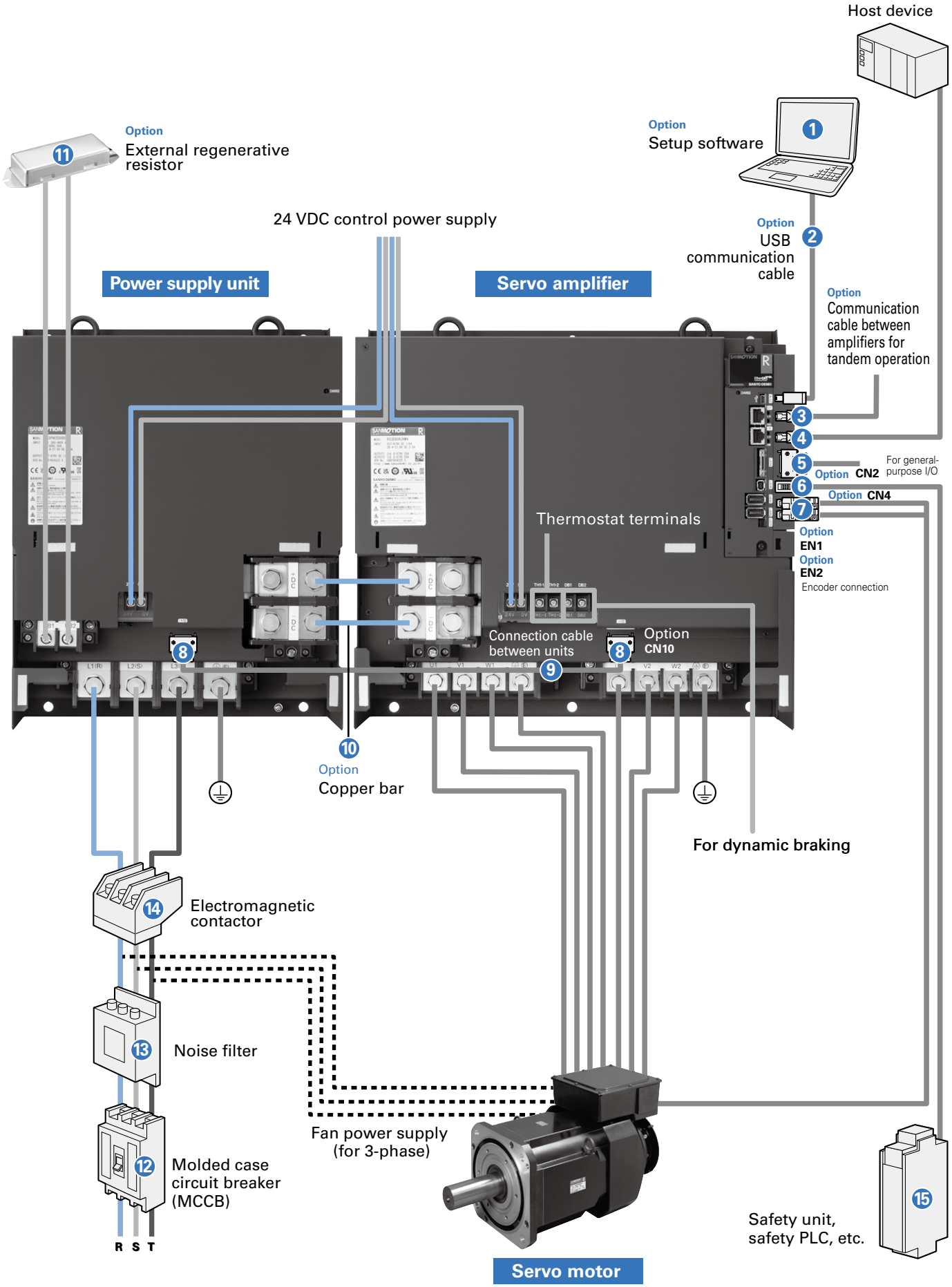

Options and Peripheral Items (800 A)

No.	Name	Model no.	Description	Page
1	Setup software	Can be downloaded from Product Information on our website.	Parameters can be set and monitored via communication with a PC.	p. 100
2	USB cable	AL-00896515-0□	PC cable for setup software	p. 113
3	OUT connector	To be provided by the customer	EtherCAT OUT (to next amplifier)	—
4	IN connector	To be provided by the customer	EtherCAT IN	—
5	CN2 connector	AL-00842383	For general-purpose I/O	p. 105
6	CN4 connector	AL-00718252-01	For safety device connection When CN4 is not used, be sure to insert the included short-circuiting connector to CN4 on the servo amplifier.	p. 105
7	EN1 connector	AL-00530312-01	For encoder connection	p. 105
	EN2 connector	AL-00530312-01	For encoder connection	p. 105
8	CN10 connector	AL-01017659	For unit-to-unit connection (A pair of 2 pieces for the power supply unit side and amplifier unit side)	p. 105
9	Unit-to-unit connection cable	AL-01018354-01	0.5 m cable for connection between power supply unit (CN10) and amplifier unit (CN10) A cable with a connector. CN10 connector AL-01017659 is not required if this is purchased.	p. 113
10	Copper bar	AL-01020858-01	For main power connection between power supply unit and amplifier unit. Between terminals +DC and -DC, with a 5 mm clearance in between. A set of 2 pcs.	p. 113
11	External regenerative resistor	REGIST-500CW□□B	Used when more regenerative capacity is needed, e.g., high-frequency movements	p. 119
12	Molded case circuit breaker (MCCB)	To be provided by the customer	Used to protect power lines	—
13	Noise filter	To be provided by the customer	Used to prevent external noise from power lines	—
14	Electromagnetic contactor	To be provided by the customer	Used to turn on and off the servo power and dynamic braking resistors	—
15	Safety unit, safety PLC, etc.	To be provided by the customer	Connects I/O signals from the Safe Torque Off function to devices such as a safety unit and safety PLC.	—

Note 1: Connector sets are also available, rather than separated items. See the respective pages listed above.
Note 2: For the options and peripheral items for Functional Safety models, see page 77.
Note 3: An EtherCAT type amplifier-amplifier communication cable is to be provided by the customer.

Common Specifications

Control functions	Position control, speed control, torque control (switched with parameters)	
Control system	IGBT-based, sinusoidal PWM control	
Main circuit power supply	3-phase 380 to 480 VAC (+10, -15%), 50/60 Hz (±3 Hz)	
Control circuit power supply*	24 VDC (±10%)	
Environment	Ambient temperature	0 to +55°C
	Storage temperature	-20 to +65°C
	Operating and storage humidity	90% RH max. (non-condensing)
	Operating altitude	1000 m or lower
	Vibration resistance	4.9 m/s^2
	Impact resistance	19.6 m/s^2
Structure	25 to 100 A: Tray type with built-in power supply; 150, 300 A: Wall-mount type with built-in power supply; 800 A: Both amplifier unit and power supply unit are wall-mounted	

Safe Torque Off model, Safety model

RoHS

Note: Servo amplifiers fall under the overvoltage category III according to EN 61800-5-1. For the 24 VDC control circuit power supply and the interface DC power supply, use a DC power supply with reinforced insulation on I/O terminals.

■ Performance

Speed control range	1:5000 (Internal speed command)
Frequency characteristics	2200 Hz (at high-speed sampling mode)
Permissible load moment of inertia	10 times the motor rotary inertia

■ Functions

Protection functions	Overcurrent, current detection error, overload, regeneration error, overheating, external error, overvoltage, main circuit power supply undervoltage main circuit power supply open phase, control circuit power supply undervoltage, encoder error, over-speed, speed control error, speed feedback error, excessive position deviation, position command pulse error, built-in memory error, parameter error, cooling fan error
Digital operator	Status display, monitor display, alarm display, test run
Dynamic braking	25 to 150 A: Built-in, 300 to 800 A: None
Regenerative resistor	25 to 100 A: Built-in, 150 to 800 A: None Optional external regenerative resistor (compatible with 25 to 800 A).
Monitoring	Speed monitoring (VMON): 2.0 V ±10% (at 1000 min^{-1}), torque (thrust) command monitoring (TCMON): 2.0 V ±10% (at 100%)

■ Safety standards

Servo amplifier type	Safety standards		
All EtherCAT type models	North American safety standards (UL)		UL 61800-5-1
	European Directive	Low Voltage Directive	IEC/EN 61800-5-1
		EMC Directive	IEC/EN 61800-3 IEC/EN 61326-1 IEC/EN 61000-6-4 IEC/EN 61000-6-2 IEC 61000-6-7
	KC Mark (Korea Certification Mark)		KN 61000-6-2, KN 61000-6-4

■ Functional safety specifications

Servo amplifier type		IEC/EN 61800-5-2:2016	Description	Safety level	
RS3□□□A□H□4 (STO models)	RS3□□□A□H□E (Functional Safety models)			EN 61508 IEC/EN 62061	ISO 13849-1:2015 EN ISO 13849-1:2015
✓	✓	STO	Safe Torque Off	SIL3, SILCL3	Cat.3 PL e
–	✓	SS1	Safe Stop 1		
–	✓	SS2	Safe Stop 2		
–	✓	SOS	Safe Operating Stop		
–	✓	SLS	Safely-Limited Speed		
–	✓	SBC	Safe Brake Control		
–	✓	SSM	Safe Speed Monitor		

■ EtherCAT interface specifications

Physical layer	IEC 61158-2, IEEE802.3u 100BASE-TX
Data link layer	IEC 61158-3/4 Type 12
Application layer	IEC 61158-5/6 Type 12
Device profile	IEC 61800-7 Profile Type 1 (CiA 402), CoE (CANopen over EtherCAT), FoE (File access over EtherCAT)
Communication port	RJ45 connector (2 ports)
Bit rate	100 Mbps (full duplex)
Maximum number of nodes	65535 nodes
Transmission distance / Topology	Max. 100 m (between nodes) / Line
Communication cable	Twisted pair CAT5e (straight-through or crossover)
Communication object	SDO (Service Data Object)　　PDO (Process Data Object)
Minimum communication cycle	125 μs (62.5 μs: Speed and torque control only)
Possible number of PDO-mapped objects	Output: max. 31 objects, Input: max. 31 objects, Total: max. 62 objects Note: Varies with the communication cycle setting. Max. 20 for 125 μs and max. 10 for 62.5 μs settings.
Synchronization type	SYNC0/SYNC1 synchronization, non-synchronized (asynchronous FreeRun mode), SM2 event synchronization
Operation mode	Profile Position mode, Profile Velocity mode, Profile Torque mode, Homing mode, Cyclic Synchronous Position mode, Cyclic Synchronous Velocity mode, Cyclic Synchronous Torque mode
LED indicator	Port 0/1 link display, RUN display, ERROR display
General-purpose I/O	Input × 7, output × 2 (total 9)

Dimensions (Unit: mm) See page p. 78 for the dimensional drawings of Functional Safety models.

25 A - Model no.: RS3C02A□H□□

Mass: 2.5 kg

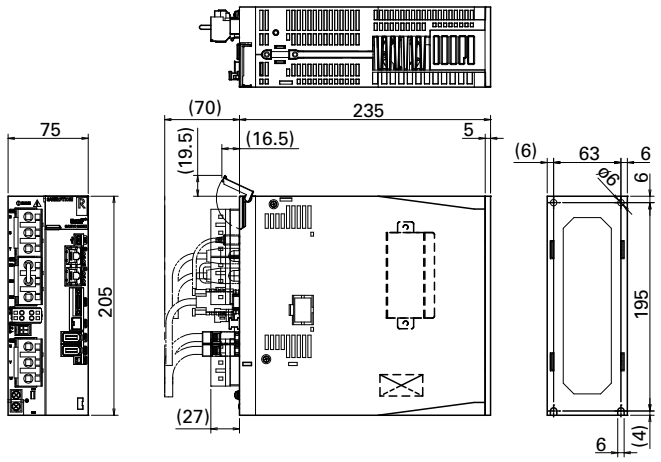

50 A - Model no.: RS3C05A□H□□

Mass: 4.7 kg

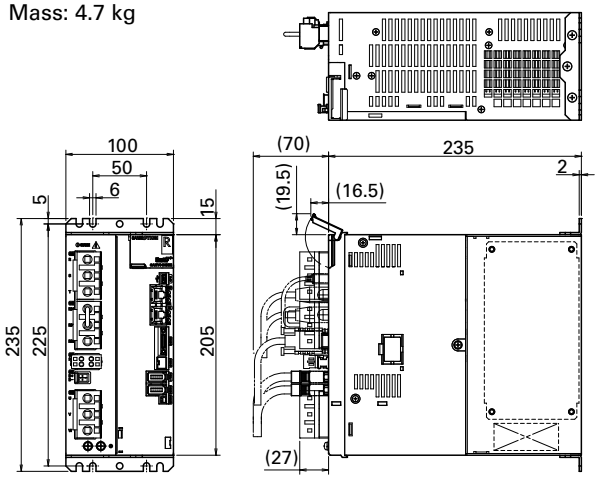

100 A - Model no.: RS3C10A□H□□

Mass: 8.5 kg

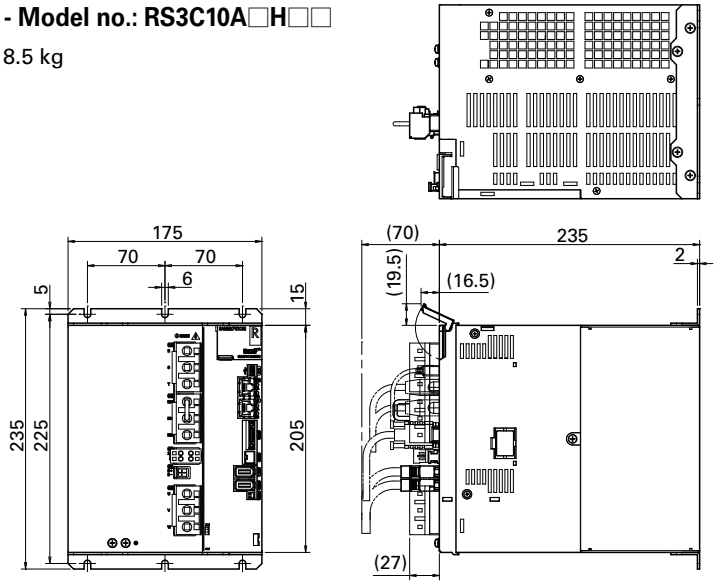

Dimensions [Unit: mm]

150 A - Model no.: RS3C15A□HL□

Mass: 11.0 kg
(Functional Safety model: 11.1 kg)

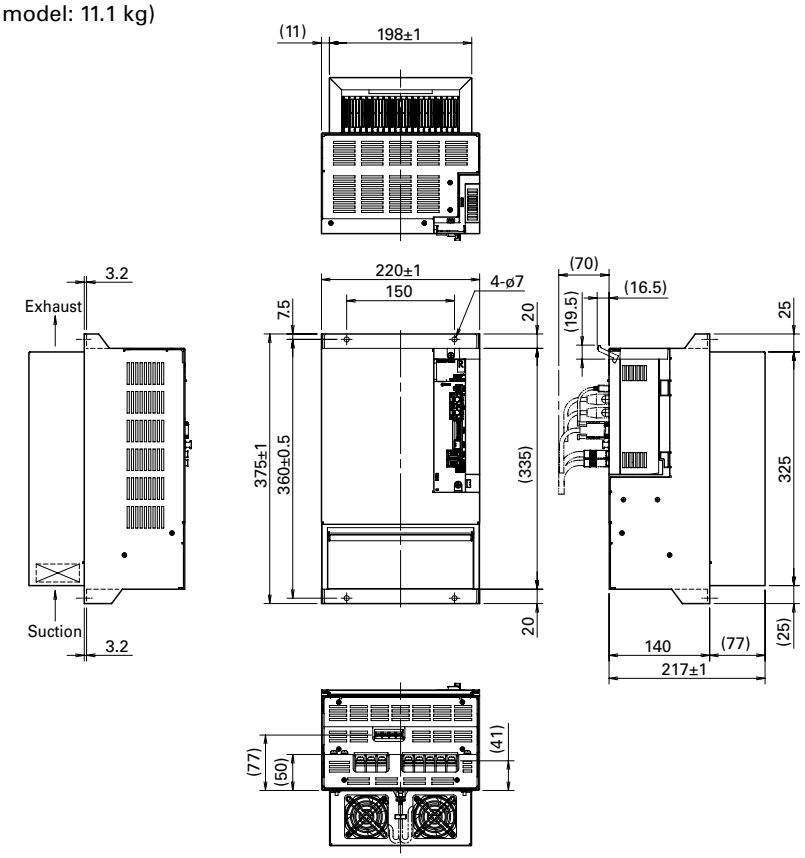

300 A - Model no.: RS3C30A□HM□

Mass: 18.0 kg
(Functional Safety model: 18.1 kg)

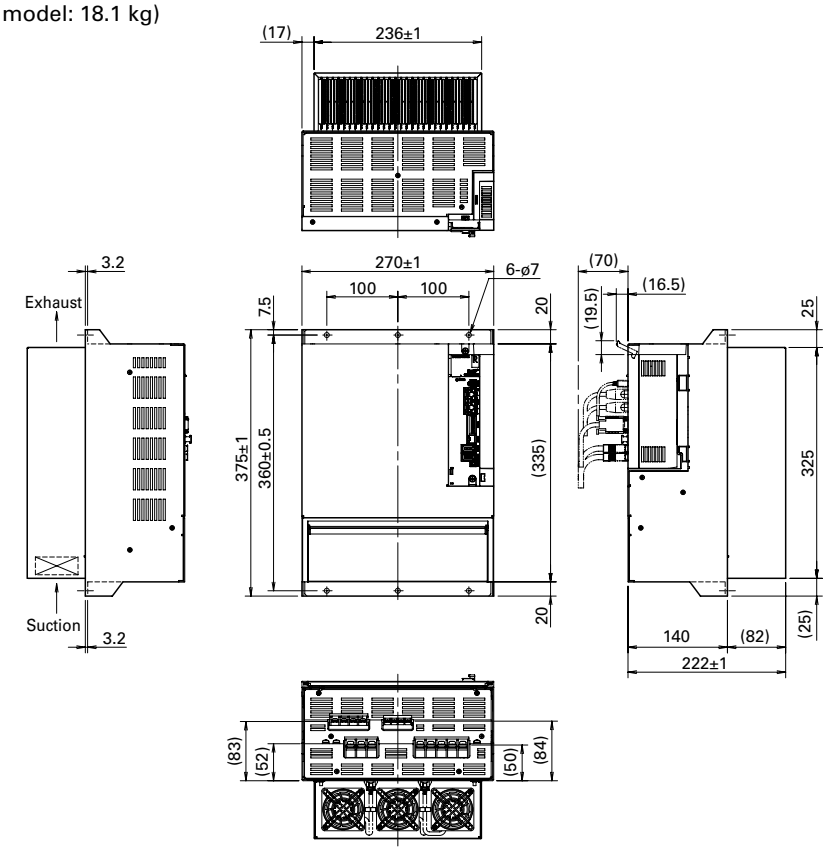

800 A

Amplifier unit model no.: RS3D80A□H□□
Mass: 32.5 kg

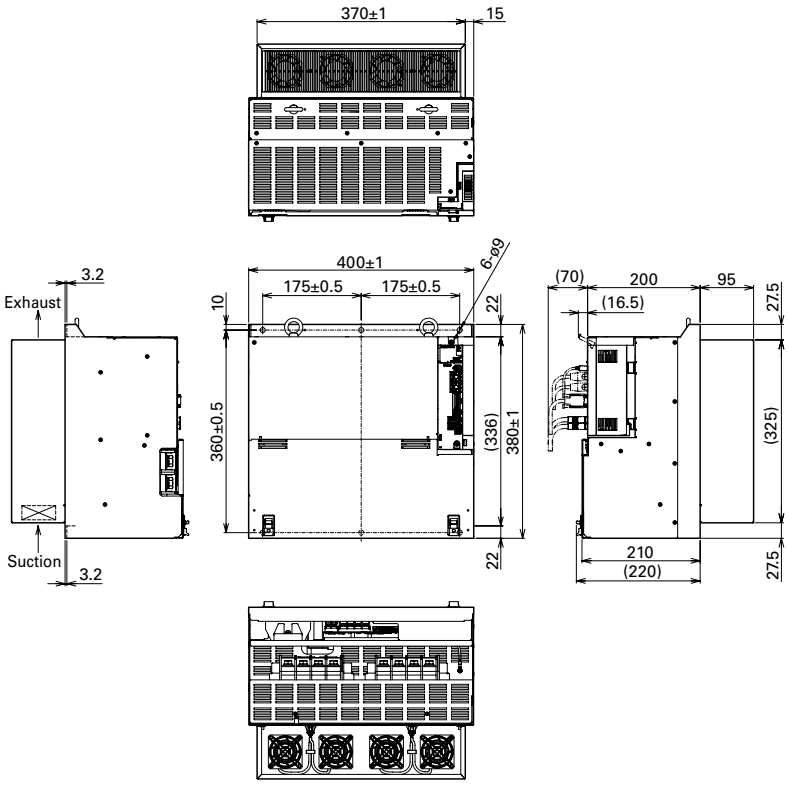

Power supply unit model no.: RS3PAC550
Mass: 23.0 kg

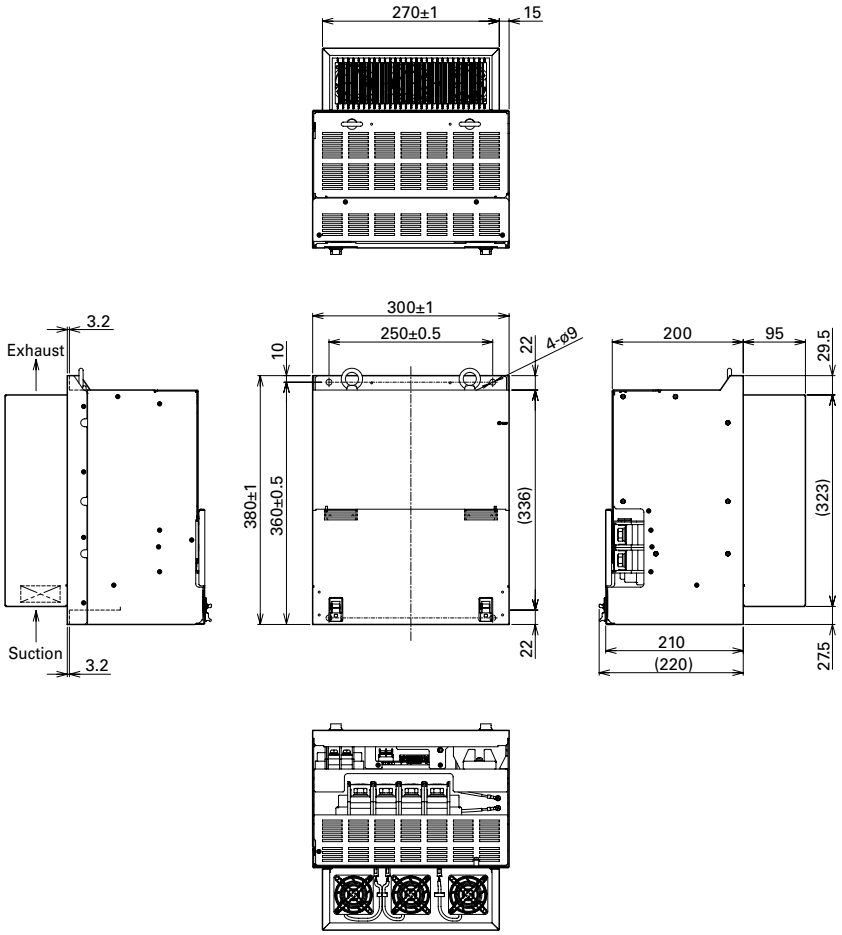

External Wiring Diagram

25 to 100 A

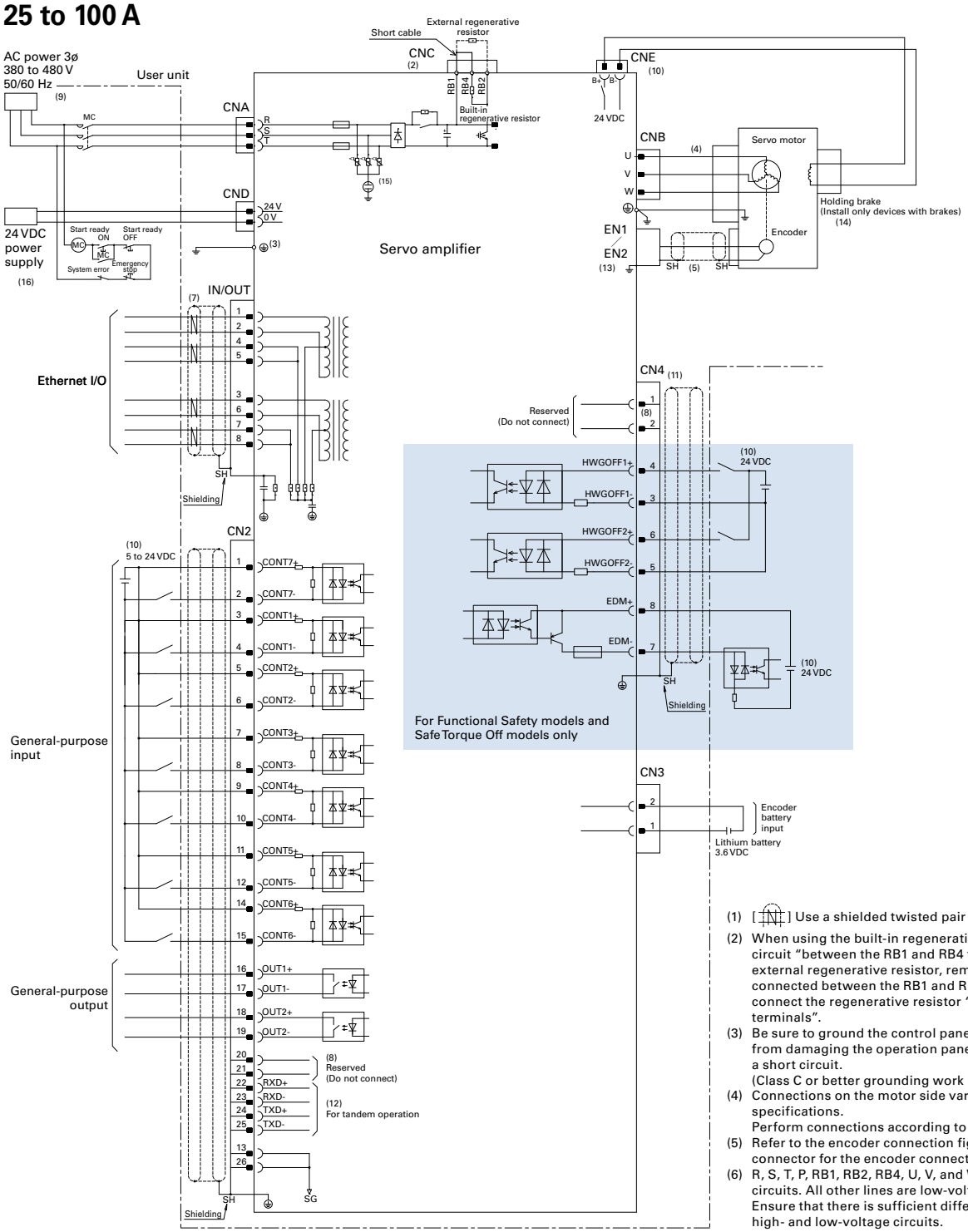

Connector No.	Name	Housing, plug, shell
CNA	Main circuit power supply connector	03JFAT-SAXGDK-P15
CNB	Servo motor power connector	03JFAT-SAZGDK-P15
CNC	Regenerative resistor connector	03JFAT-SAYGDK-P15
Connector tool	Connector tool for CNA, CNB, CNC	J-FAT-OT-P
CND	Control circuit power supply input connector	04JFAT-SAGG-G-KK
Connector tool	Connector tool for CND	J-FAT-OT(N)
CNE	Holding brake power output connector	02MJFAT-SAGF
Connector tool	Connector tool for CNE	MJFAT-OT
EN1/EN2	Encoder connector	54599-1019
CN2	General-purpose I/O connector (For EtherCAT model only)	Connector: HDR-E26MSG1+ Shell kit: HDR-E26LPH
CN4	STO connector	For short-circuiting: 1971153-2 For wiring: 2013595-3

(1) [ ] Use a shielded twisted pair cable.
(2) When using the built-in regenerative resistor, short the circuit "between the RB1 and RB4 terminals". When using an external regenerative resistor, remove the shorting bar connected between the RB1 and RB4 terminals and then connect the regenerative resistor "between the RB1 and RB2 terminals".
(3) Be sure to ground the control panel to prevent high voltages from damaging the operation panel or equipment in case of a short circuit.
(Class C or better grounding work recommended)
(4) Connections on the motor side vary depending on the motor specifications.
Perform connections according to the motor specifications.
(5) Refer to the encoder connection figure for the wiring of the connector for the encoder connection.
(6) R, S, T, P, RB1, RB2, RB4, U, V, and W are high-voltage circuits. All other lines are low-voltage.
Ensure that there is sufficient differential between the high- and low-voltage circuits.
(7) Use a category 5e (TIA standards) or above shielded twisted pair cable (STP).
(8) Do not connect anything to the CN4-1, CN4-2, CN2-20, and CN2-21 pins.
(9) An earth leakage circuit breaker conforming either to UL, IEC, or EN standards is recommended.
(10) The external power supply is to be arranged by the customer.
(11) CN4 is a connector for the Safe Torque Off function.
To turn Servo ON (motor in operation), it is required to connect safety equipment to CN4 and get STO enabled.
If not using STO, be sure to insert the short-circuiting STO connector (Mfr. part no.: 1971153-2) to CN4.
(12) The CN2-22 to CN2-25 pins are used for tandem operations. Connect compatible amplifiers as below.

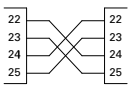

(13) When using an incremental encoder in a semi-closed system, connect to EN2.
(14) If the holding brake has a 24 V rated voltage, it can be powered from the built-in holding brake power output connector (CNE) of the amplifier.
(15) Consult with us when conducting a withstand voltage test.
(16) For the 24 VDC power supply, use a safety extra low voltage (SELV) power supply with reinforced insulation on I/O terminals.

150, 300 A

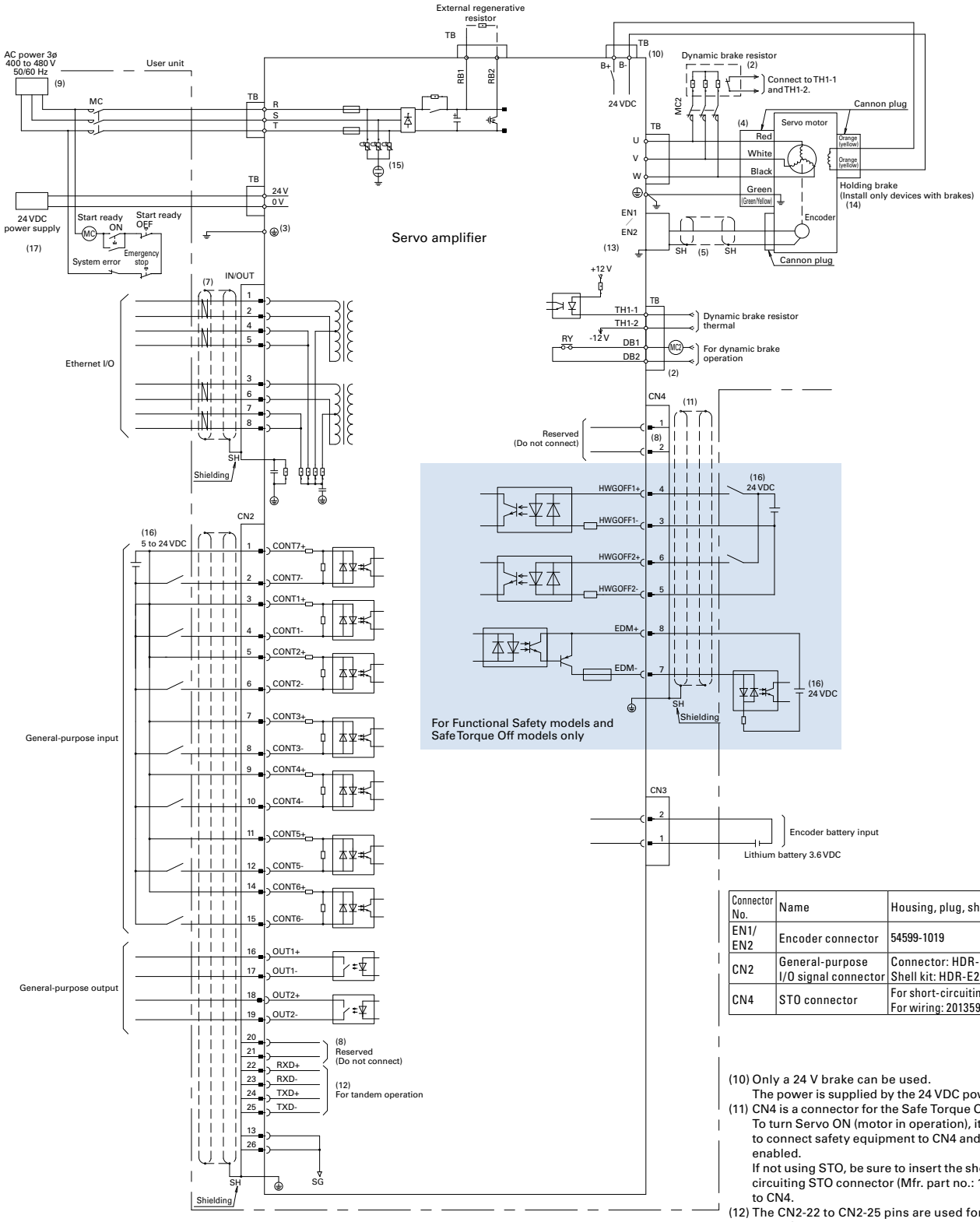

Connector No.	Name	Housing, plug, shell
EN1/ EN2	Encoder connector	54599-1019
CN2	General-purpose I/O signal connector	Connector: HDR-E26MSG1+ Shell kit: HDR-E26LPH
CN4	STO connector	For short-circuiting: 1971153-2 For wiring: 2013595-3

(1) [ ] Use a shielded twisted pair cable.

(2) For amplifier capacity 150 A:
The amplifier does not have the DB1, DB2, TH1-1, and TH1-2 terminals. The amplifier has a built-in dynamic brake circuit, so there is no need for connecting external DB resistors.
For amplifier capacity 300 A:
The amplifier does not have a built-in dynamic brake circuit. The DB1 and DB2 are external dynamic brake timing outputs, and the TH1-1 and TH1-2 are external DB resistor thermostat inputs. When not using a DB resistor thermostat, short-circuit TH1-1 and TH1-2.
The electromagnetic contactor, resistor, power supply, and wiring are to be arranged by the customer. For the electromagnetic contactor, arrange a DC drive type. Contact rating 30 VDC, 2 A (COSø = 0.4, L/R = 7 ms)

(3) Be sure to ground the control panel to prevent high voltages from damaging the operation panel or equipment in case of a short circuit.
(Class C or better grounding work recommended)

(4) Connections on the motor side vary depending on the motor specifications. The indications of red, white, black, green and orange apply when the motor power and brake lines are the lead type.
When they are the cannon plug type, perform connections according to the motor specifications.

(5) Refer to the encoder connection figure for the wiring of the connector for the encoder connection.

(6) R, S, T, RB1, RB2, U, V, and W are high-voltage circuits. All other lines are low-voltage.
Ensure that there is sufficient differential between the high- and low-voltage circuits.

(7) Use a category 5e (TIA standards) or above shielded twisted pair cable (STP).

(8) Do not connect anything to the CN4-1, CN4-2, CN2-20, and CN2-21 pins.

(9) An earth leakage circuit breaker conforming either to UL, IEC, or EN standards is recommended.

(10) Only a 24 V brake can be used.
The power is supplied by the 24 VDC power supply.

(11) CN4 is a connector for the Safe Torque Off function. To turn Servo ON (motor in operation), it is required to connect safety equipment to CN4 and get STO enabled.
If not using STO, be sure to insert the short-circuiting STO connector (Mfr. part no.: 1971153-2) to CN4.

(12) The CN2-22 to CN2-25 pins are used for tandem operations.
Connect compatible amplifiers as below.

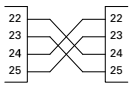

(13) When using an incremental encoder in a semi-closed system, connect to EN2.

(14) If the holding brake has a 24 V rated voltage, it can be powered from the built-in holding brake power output terminals (B+ and B-) of the amplifier.

(15) Consult with us when conducting a withstand voltage test.

(16) The external power supply is to be arranged by the customer.

(17) For the 24 VDC power supply, use a safety extra low voltage (SELV) power supply with reinforced insulation on I/O terminals.

External Wiring Diagram

800 A

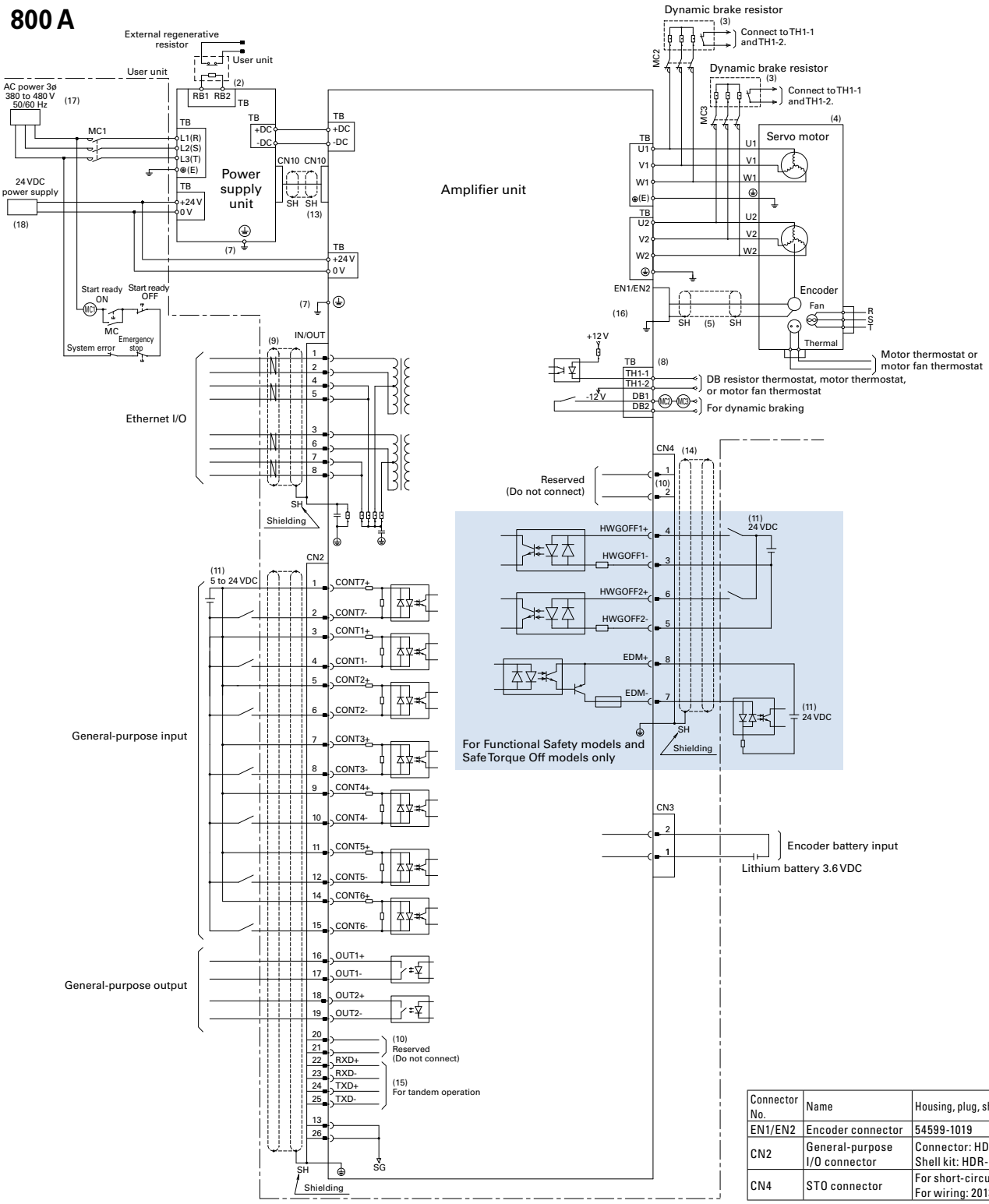

Connector No.	Name	Housing, plug, shell
EN1/EN2	Encoder connector	54599-1019
CN2	General-purpose I/O connector	Connector: HDR-E26MSG1+ Shell kit: HDR-E26LPH
CN4	STO connector	For short-circuiting: 1971153-2 For wiring: 2013595-3

(1) [ ] The part indicated by the figure on the left should be wired with shielded twisted pair (STP) cables.

(2) An external regenerative resistor should be connected between the RB1 and RB2 terminals.

(3) Consult us when selecting an external dynamic brake resistor.

(4) Motor side connections vary depending on motor specifications. Perform connections according to the specifications.

(5) Refer to the encoder connection diagram for the wiring of encoder connectors.

(6) R, S, T, +DC, -DC, RB1, RB2, U1, V1, W1, U2, V2, and W2 are high-voltage circuits. All other signal lines are low-voltage circuits. When wiring, provide sufficient clearance between high-voltage and low-voltage circuits.

(7) Ground with a wire of 5.5 mm^2 or larger size.

(8) The amplifier does not have a built-in dynamic brake circuit. DB1 and DB2 are DB timing outputs, and TH1-1 and TH1-2 are DB resistor thermostat inputs. When not using a thermostat, ensure that TH1-1 and TH1-2 are short-circuited. Necessary items, an electromagnetic contactor, resistor, power supply, and cable, are to be prepared by the customer. For the electromagnetic contactor, prepare one that works with DC power. Relay contact rating: 30 VDC, 2 A (cosø = 0.4, L/R = 7 ms)

(9) Use a shielded twisted pair (STP) cable of Category 5e or higher (TIA).

(10) Do not connect anything to the CN4-1, CN4-2, CN2-20, or CN2-21 pins.

(11) An external power supply is to be prepared by the customer.

(12) Consult us when conducting a withstand voltage test.

(13) For the wiring of unit-to-unit cables, refer to the wiring diagram in the Instruction Manual (M0011694).

(14) CN4 is a connector for the Safe Torque Off function. Turning Servo ON (motor in operation) requires to connect a safety device to CN4 and get STO enabled. When not using STO, be sure to insert the short-circuiting STO connector (Mfr. part no.: 1971153-2) to CN4.

(15) The CN2-20 to CN2-25 pins are used for tandem operation.
Connect compatible amplifiers as on the right.

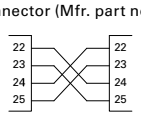

(16) When using an incremental encoder to configure a semi-closed system, connect it to EN2.

(17) Use of a UL or IEC/EN compliant leakage circuit breaker is recommended.

(18) For a 24 VDC power supply, use a SELV (safety extra low voltage) power supply with reinforced insulation on I/O terminals.

Servo Amplifier

R 3E Model Built-in Positioning Function type

Amplifier capacity: 25 to 800 A

This is a high-responsiveness AC servo amplifier that pursues evolved performance, energy efficiency, and ease of use.
The need for a positioning control unit is eliminated, simplifying the system.



■ How to Read Model Numbers

Note that not all the possible combinations of the numbers and characters below are valid.
Also, some of the numbers/characters listed below are for optional models.
For model numbers valid as standard products, refer to "Standard Model Number List".

Servo amplifier

RS3 C 02 A 0 C A 4

Option 2

Code	Safe Torque Off function	Functional Safety
4	✓(with delay circuit)	—
E	✓ (with delay circuit)	✓

Option 1

Code	Specifications	Amp. capacity
A	With built-in regenerative resistor & With DB resistor	25 to 100 A
L	Without built-in regenerative resistor (option: external) & With DB resistor	150 A
M	Without built-in regenerative resistor (option: external) & Without DB resistor	300 A, 800 A

Note: The 800 A amplifier's regenerative resistor is to be connected to a 55 kW power supply unit.

Interface

Code	Specifications
C	Parallel interface
F	Serial interface (RS-485)

Encoder connection type

Code	EN1 (Motor encoder)	EN2 (Motor encoder or external encoder)
0	Absolute encoder	-
2	Absolute encoder	Incremental encoder for motor / External incremental encoder for fully closed-loop systems
8	Incremental encoder	-
A	Incremental encoder	External incremental encoder for fully closed-loop systems

Servo motor type

Code	Specifications
A	Rotary motor

Servo amplifier capacity

Code	Specifications
02	25 A
05	50 A
10	100 A
15	150 A
30	300 A
80	800 A

Input voltage

Code	Specifications
C	Main 400 VAC /control 24 VDC
D*	Main 560 VDC /control 24 VDC

* Applies to 800 A only. The combination power supply unit's input voltage is 400 VAC.

3E Model series

Power supply unit for 800 A amplifier

RS3PA C 550

Rated output
550 ···55 kW

Input voltage
C ··· 400 VAC / control 24 VDC

Power supply unit for the 3E Model series

System Configuration

See page p. 77 for the system configuration of Functional Safety models.

25 to 100 A, parallel type

The photo shows a 25 A model.

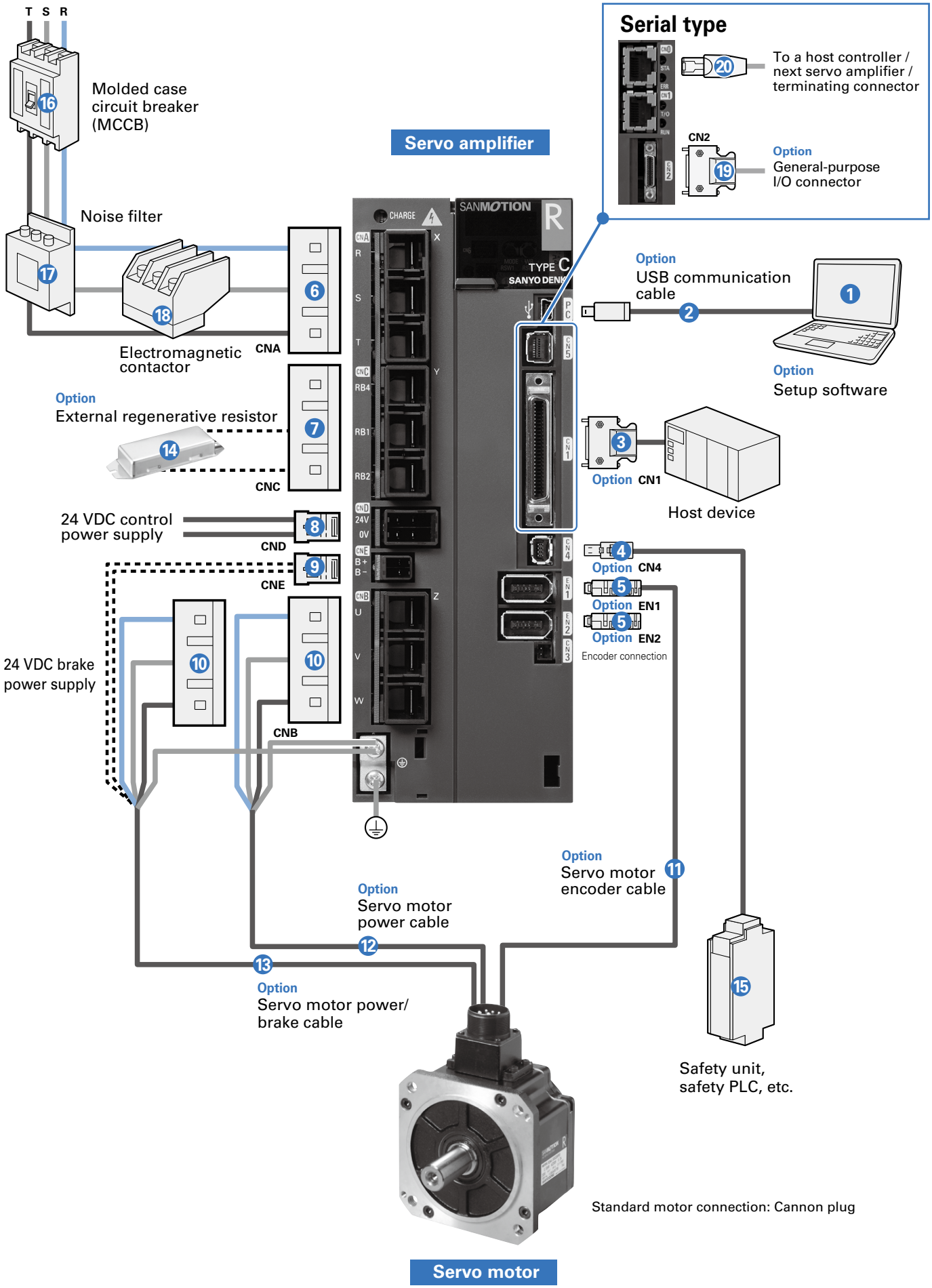

Options and Peripheral Items (25 to 100 A)

Parallel type

No.	Name	Model no.	Description	Page
1	Setup software	Can be downloaded from Product Information on our website.	Parameters can be set and monitored via communication with a PC.	p. 100
2	USB cable	AL-00896515-0□	PC cable for setup software	p. 113
3	CN1 connector	AL-00385594	For controller connection	p. 106
4	CN4 connector	AL-00718252-01	For safety device connection When CN4 is not used, be sure to insert the included short-circuiting connector to CN4 on the servo amplifier.	p. 106
5	EN1 connector	AL-00530312-01	For encoder connection	p. 106
	EN2 connector	AL-00530312-01	For encoder connection	p. 106
6	CNA connector*	AL-00953863-01	For main circuit power supply connection One will be included with a servo amplifier.	p. 106
7	CNC connector*	AL-00953864-01	For regenerative resistor connection One will be included with a servo amplifier.	p. 106
8	CND connector*	AL-00961843-01	For control circuit power supply connection One will be included with a servo amplifier.	p. 106
9	CNE connector*	AL-00953867-01	For brake connection	p. 106
10	CNB connector*	AL-00953865-01	For servo motor connection One will be included with a servo amplifier.	p. 106
11	Servo motor cables	AL-00937694-□□	Encoder cable	p. 116
12		AL-0096□□□□-□□	Power cable	p. 114
13		AL-0096□□□□-□□	Power/brake cable	p. 114
14	External regenerative resistor	REGIST-500CW□□B	Used when more regenerative capacity is needed, e.g., high-frequency movements	p. 119
15	Safety unit, safety PLC, etc.	To be provided by the customer	Connects I/O signals from the Safe Torque Off function to devices such as a safety unit and safety PLC.	—
16	Molded case circuit breaker (MCCB)	To be provided by the customer	Used to protect power lines	—
17	Noise filter	To be provided by the customer	Used to prevent external noise from power lines	—
18	Electromagnetic contactor	To be provided by the customer	Used to switch the power on and off.	—

* Wiring on the CNA to CNE connectors requires a connector tool. → p. 106

Note 1: Connector sets are also available, rather than separated items. See the respective pages listed above.
Note 2: For the options and peripheral items for Functional Safety models, see page p. 77.

Serial type

The serial type has the same options as the parallel type other than the followings.

No.	Name	Model no.	Description	Page
19	CN2 connector	AL-00842383	For general-purpose I/O	p. 108
20	CN0, CN1	AL-01101864	Terminating resistor connector	p. 113
		AL-01101866-0□	Amplifier-amplifier Modbus cable	p. 113
		AL-01101867-□□	Controller-amplifier Modbus cable	p. 113

System Configuration

See page p. 77 for the system configuration of Functional Safety models.

150, 300 A, parallel type

The photo shows a 300 A model.

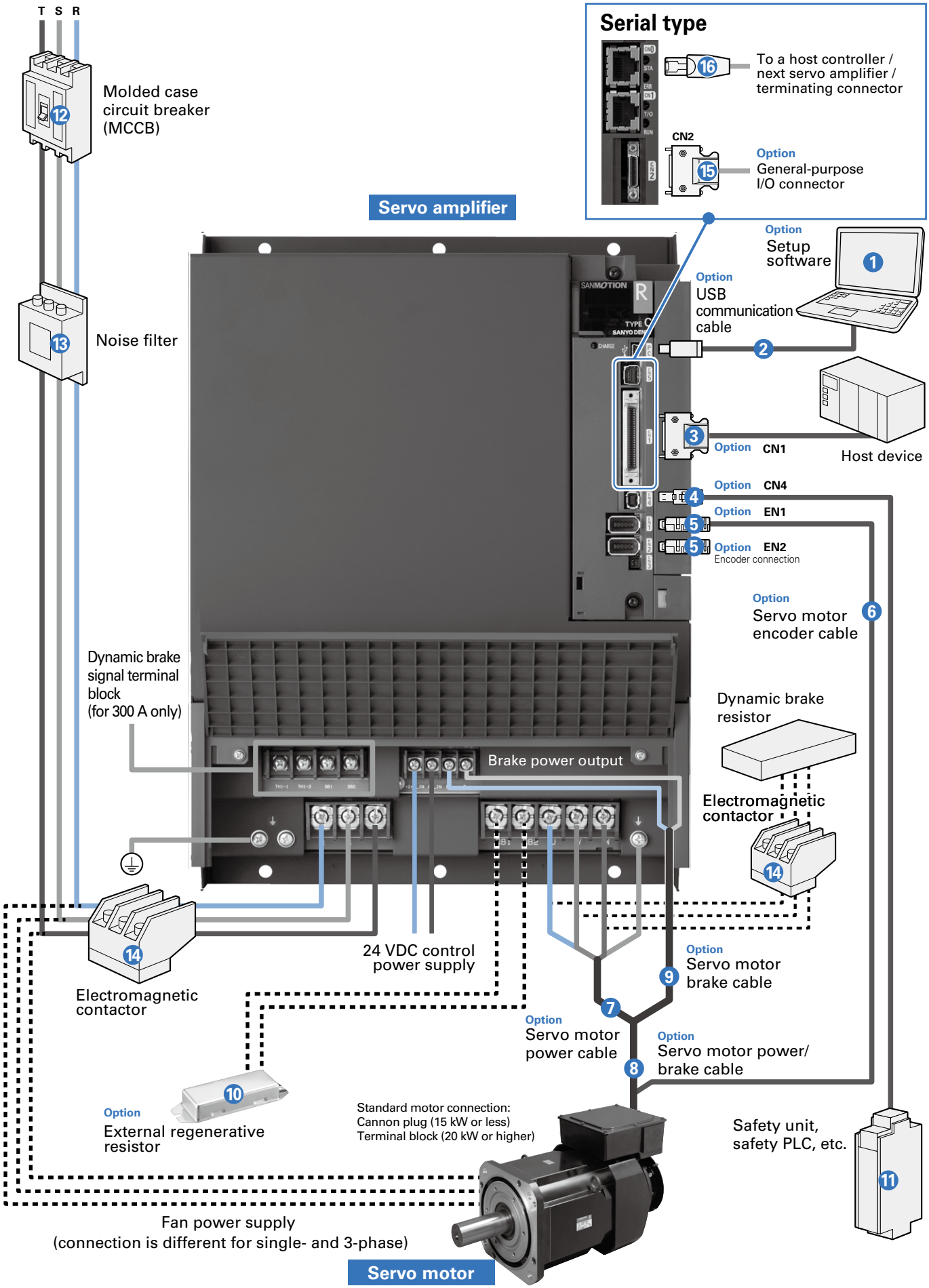

Options and Peripheral Items (150 A, 300 A)

Parallel type

No.	Name	Model no.	Description	Page
1	Setup software	Can be downloaded from Product Information on our website.	Parameters can be set and monitored via communication with a PC.	p. 100
2	USB cable	AL-00896515-0□	PC cable for setup software	p. 113
3	CN1 connector	AL-00385594	For controller connection	p. 107
4	CN4 connector	AL-00718252-01	For safety device connection When CN4 is not used, be sure to insert the included short-circuiting connector to CN4 on the servo amplifier.	p. 107
5	EN1 connector	AL-00530312-01	For encoder connection	p. 107
	EN2 connector	AL-00530312-01	For encoder connection	p. 107
6	Servo motor cables	AL-009□□□□□-□□	Encoder cable	p. 116
7		AL-009□□□□□-□□	Power cable	pp. 114 to 115
8		AL-009□□□□□-□□	Power/brake cable	pp. 114 to 115
9		AL-009□□□□□-□□	For brake connection	p. 117
10	External regenerative resistor	REGIST-500CW□□B	Used when more regenerative capacity is needed, e.g., high-frequency movements	p. 119
11	Safety unit, safety PLC, etc.	To be provided by the customer	Connects I/O signals from the Safe Torque Off function to devices such as a safety unit and safety PLC.	–
12	Molded case circuit breaker (MCCB)	To be provided by the customer	Used to protect power lines	–
13	Noise filter	To be provided by the customer	Used to prevent external noise from power lines	–
14	Electromagnetic contactor	To be provided by the customer	Used to turn on and off the servo power and dynamic braking resistors	–

Note 1: Connector sets are also available, rather than separated items. See the respective pages listed above.
Note 2: For the options and peripheral items for Functional Safety models, see page p. 77.

Serial type

The serial type has the same options as the parallel type other than the followings.

No.	Name	Model no.	Description	Page
15	CN2 connector	AL-00842383	For general-purpose I/O	p. 109
16	CN0, CN1	AL-01101864	Terminating resistor connector	p. 113
		AL-01101866-0□	Amplifier-amplifier Modbus cable	p. 113
		AL-01101867-□□	Controller-amplifier Modbus cable	p. 113

System Configuration

See page p. 77 for the system configuration of Functional Safety models.

800 A, parallel type

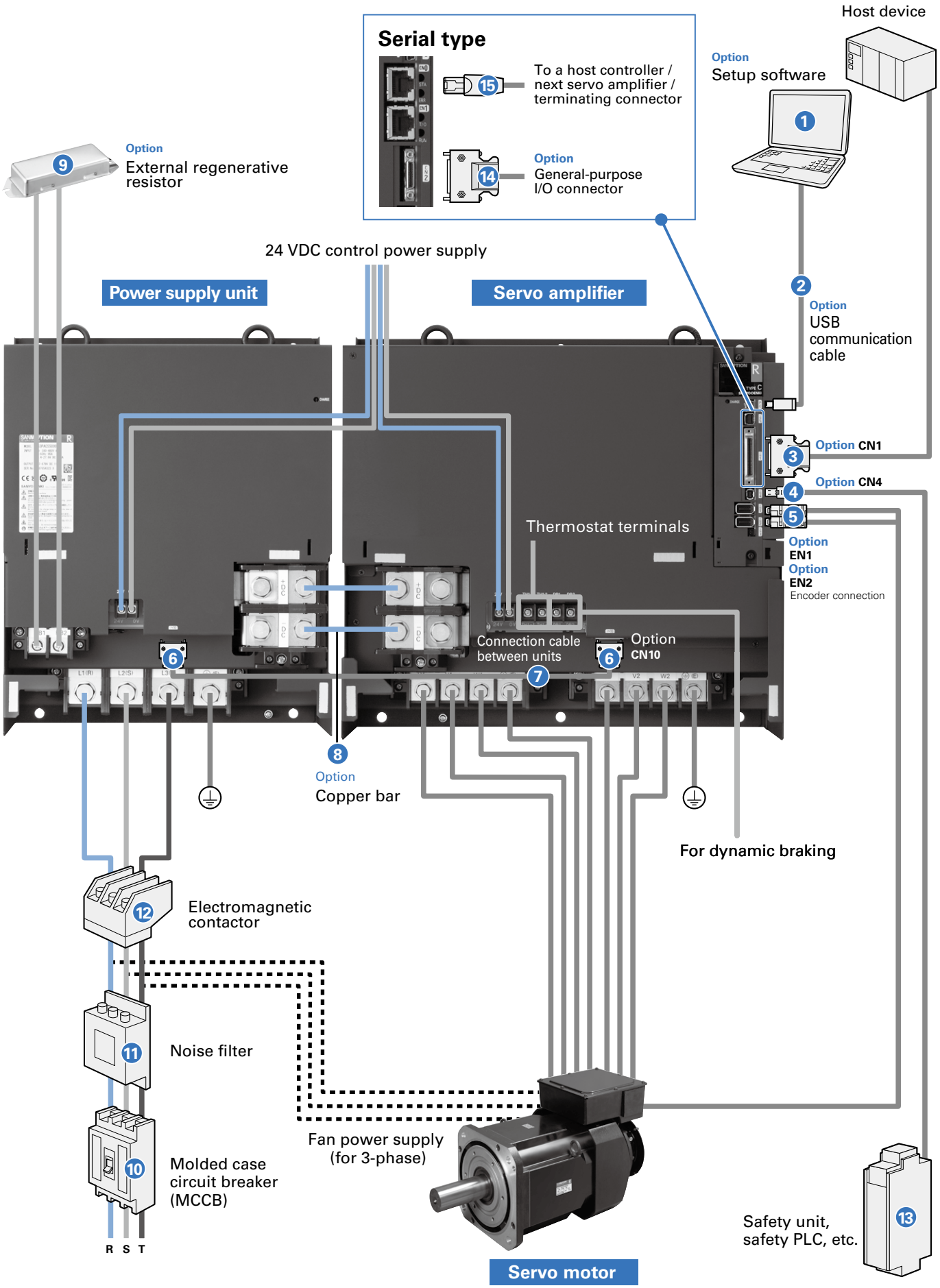

Options and Peripheral Items (800 A)

Parallel type

No.	Name	Model no.	Description	Page
1	Setup software	Can be downloaded from Product Information on our website.	Parameters can be set and monitored via communication with a PC.	p. 100
2	USB cable	AL-00896515-0□	PC cable for setup software	p. 113
3	CN1 connector	AL-00385594	For controller connection	p. 107
4	CN4 connector	AL-00718252-01	For safety device connection When CN4 is not used, be sure to insert the included short-circuiting connector to CN4 on the servo amplifier.	p. 107
5	EN1 connector	AL-00530312-01	For encoder connection	p. 107
	EN2 connector	AL-00530312-01	For encoder connection	p. 107
6	CN10 connector	AL-01017659	For unit-to-unit connection (A pair of 2 pieces for the power supply unit side and amplifier unit side)	p. 107
7	Connection cable between units	AL-01018354-01	0.5 m cable for connection between power supply unit (CN10) and amplifier unit (CN10) Cable with a connector. CN10 connector AL-01017659 is not required if this is purchased.	p. 113
8	Copper bar	AL-01020858-01	For main power connection between power supply unit and amplifier unit. Between terminals +DC and -DC. Set of 2 pcs. (5 mm between units)	p. 113
9	External regenerative resistor	REGIST-500CW□□B	Used when more regenerative capacity is needed, e.g., high-frequency movements	p. 119
10	Molded case circuit breaker (MCCB)	To be provided by the customer	Used to protect power lines	–
11	Noise filter	To be provided by the customer	Used to prevent external noise from power lines	–
12	Electromagnetic contactor	To be provided by the customer	Used to turn on and off the servo power and dynamic braking resistors	–
13	Safety unit, safety PLC, etc.	To be provided by the customer	Connects I/O signals from the Safe Torque Off function to devices such as a safety unit and safety PLC.	–

Note 1: Connector sets are also available, rather than separated items. See the respective pages listed above.
Note 2: For the options and peripheral items of Functional Safety models, see page p. 77.

Serial type

The serial type has the same options as the parallel type other than the followings.

No.	Name	Model no.	Description	Page
14	CN2 connector	AL-00842383	For general-purpose I/O	p. 109
15	CN0, CN1	AL-01101864	Terminating resistor connector	p. 113
		AL-01101866-0□	Amplifier-amplifier Modbus cable	p. 113
		AL-01101867-□□	Controller-amplifier Modbus cable	p. 113

General Specifications

Control functions	Position control	
Control system	IGBT-based, sinusoidal PWM control	
Main circuit power supply	3-phase 380 to 480 VAC (+10, -15%), 50/60 Hz (±3 Hz)	
Control circuit power supply*	24 VDC (±10%)	
Environment	Ambient temperature	0 to +55˚C
	Storage temperature	-20 to +65˚C
	Operating and storage humidity	90% RH max. (non-condensing)
	Operating altitude	1000 m or lower
	Vibration resistance	4.9 m/s^2
	Impact resistance	19.6 m/s^2
Structure	25 to 100 A: Tray type with built-in power supply; 150, 300 A: Wall-mount type with built-in power supply; 800 A: Both amplifier unit and power supply unit are wall-mounted	

Safe Torque Off model, Safety model

RoHS

* Servo amplifiers fall under the overvoltage category III according to EN 61800-5-1. For the 24 VDC control circuit power supply and the interface DC power supply, use a DC power supply with reinforced insulation on I/O terminals.

■ Performance

Speed control range	1:5000 (Internal speed command)
Frequency characteristics	1000 Hz
Permissible load moment of inertia	10 times the motor rotary inertia

■ Built-in functions

Protection functions	Overcurrent, current detection error, overload, regeneration error, overheating, external error, overvoltage, main circuit power supply undervoltage main circuit power supply open phase, control circuit power supply undervoltage, encoder error, overspeed, speed control error, speed feedback error, excessive position deviation, position command pulse error, built-in memory error, parameter error, cooling fan error
Digital operator	Status display, monitor display, alarm display
Dynamic braking	25 to 150 A: Built-in, 300 to 800 A: None
Regenerative resistor	25 to 100 A: Built-in, 150 to 800 A: None Optional external regenerative resistor (compatible with 25 to 800 A).
Monitoring	Speed monitoring (VMON): 2.0 V ±10% (at 1000 min^{-1}), torque (thrust) command monitoring (TCMON): 2.0 V ±10% (at 100%)

■ Safety standards

Servo amplifier type	Safety standards		
All built-in positioning function models	North American standards (UL, cUL)		UL 61800-5-1
	European Directive	Low Voltage Directive	IEC/EN 61800-5-1
		EMC Directive	IEC/EN 61000-6-4 IEC/EN 61800-3 IEC/EN 61000-6-2 IEC/EN 61326-1 IEC 61000-6-7
	KC (Korea Certification) Mark		KN 61000-6-2, KN 61000-6-4

■ Functional safety specifications

Servo amplifier type		IEC 61800-5-2:2016 EN 61800-5-2:2017	Description	Safety level	
RS3□□□A□C□4 RS3□□□A□F□4 (STO models)	RS3□□□A□C□E RS3□□□A□F□E (Functional Safety models)			EN 61508 IEC/EN 62061	ISO 13849-1:2015 EN ISO 13849-1:2015
✓	✓	STO	Safe Torque Off	SIL3, SILCL3	Cat.3 PL e
–	✓	SS1	Safe Stop 1		
–	✓	SS2	Safe Stop 2		
–	✓	SOS	Safe Operating Stop		
–	✓	SLS	Safely-Limited Speed		
–	✓	SBC	Safe Brake Control		
–	✓	SSM	Safe Speed Monitor		

■ RS-485 communication specifications

Item	Description	Default value	Remarks
Protocol	Modbus-RTU	—	Binary mode fixed (ASCII mode not supported)
Interface	RS-485 (1:N)	—	N = 8*
Transmission speed (bps)	4800, 9600, 19200, 38400, 57600, 115200	115200	Settings are done with setup software or the rotary switch on the front side of the amplifier.
Start bit	1	1	Fixed
Data length (bit)	8	8	Fixed
Parity	None, even number, odd number	Even number	Settings are done with setup software.
Stop bit	1, 2	1	
Electrical Specifications	RS-485 compliant (half duplex communication)		Fixed
Connector	RJ-45	—	

* Up to 8 axes of this servo amplifier can be connected per segment. When connecting 8 axes or more, consult us.

Positioning Function Specifications and Operation Examples

Positioning Function	No. of controllable axes	1
	Number of points	Up to 254 points (P000 to P253) can be set
	Command range	-2,147,483,648 to +2,147,483,647
	Command unit	Selectable from mm/pulse/deg
	Feeding speed	2,147,483,647 mm/s (At a setting of 0.001 mm/pulse)
	Acceleration/deceleration	Linear/S-curve can be switched
	Point data setting	Set by numerical input with a PC or by teaching
	Point number setting	Parallel 8 bit (binary code)
	Torque limit	0 to 799% (With 100% being the rated value); however, peak torque at stall cannot be exceeded
	Software limit	Available
	Operation modes	Homing, manual (Jog, 1 step), and point specification mode
	Zone signal	8 zones max.
Input/Output	Sequence input signal	Servo ON, alarm reset, startup, homing, manual, override/manual high speed, cancel, homing slowdown, external error, overtravel, 1 step feed, interruption start, output selection, MFIN, point specification input
	Sequence output signal	NC ready, holding brake timing, error, external operation mode, while operation, positioning complete, in-position output, homing complete, general-purpose output (8-bit)

■ Operation examples of amplifiers with built-in positioning function

By starting Point 1, Point 2 and Point 3 can be continuously operated.

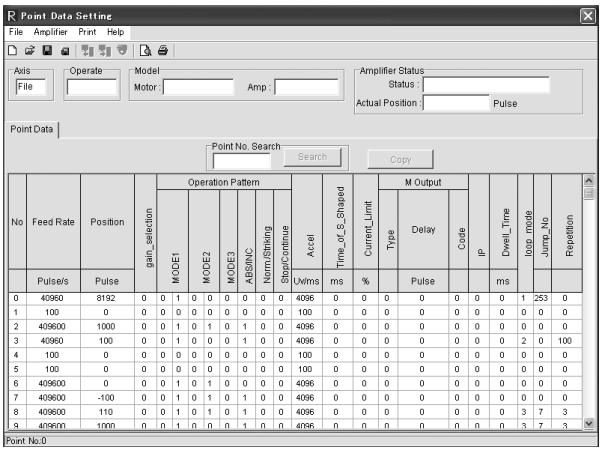

- Point data setting

The setup software allows you to set, save, and read point data from computers.

Mode 1: "01" = Positioning operation active,
Mode 2: "00" = Final move,
"01" = Continues to the next point number
Velocity change: stop/continuous: "1" = Continuous speed change operation

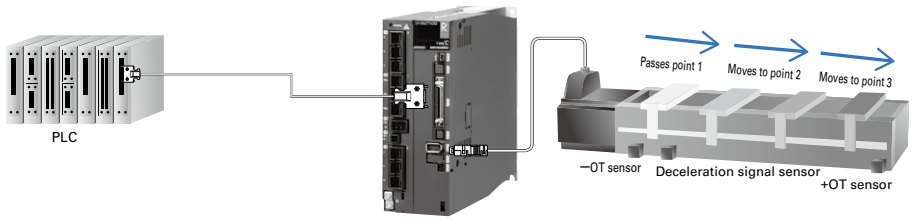

With 0 as the start coordinate, a point 001 (P001) is started.

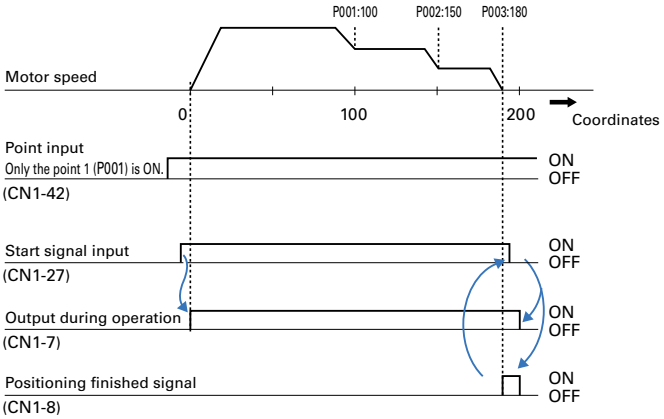

Dimensions

(Unit: mm) See page p. 78 for the dimensional drawings of Functional Safety models.

Parallel type

25 A - Model no.: RS3C02A□C□□

Mass: 2.5 kg

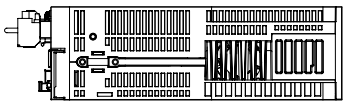

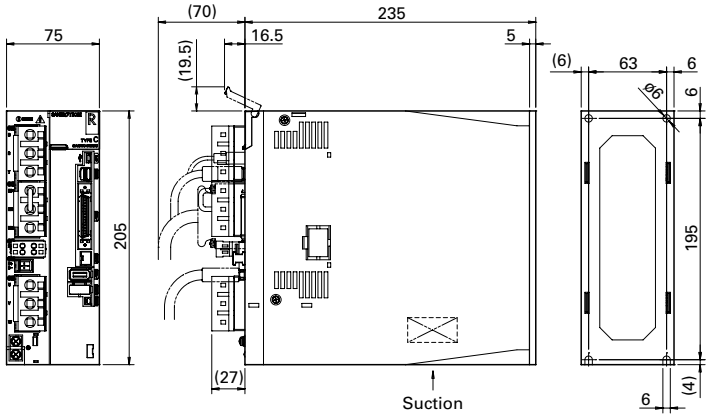

50 A - Model no.: RS3C05A□C□□

Mass: 4.7 kg

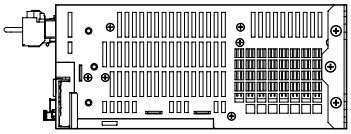

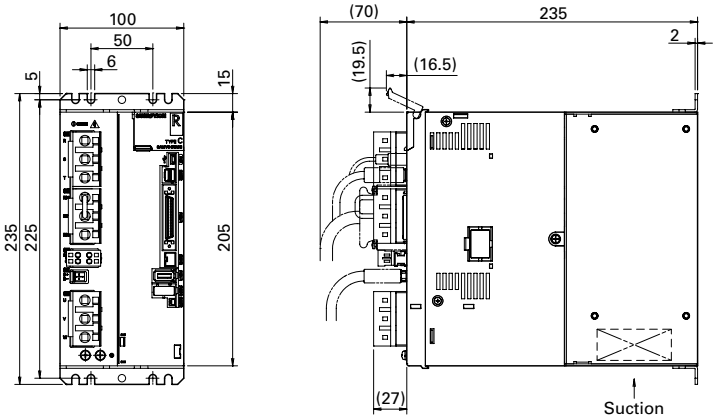

100 A - Model no.: RS3C10A□C□□

Mass: 8.5 kg

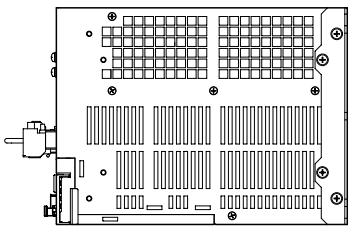

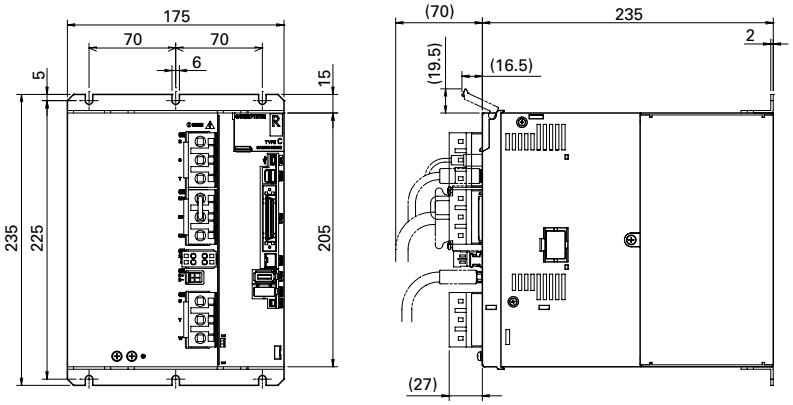

Parallel type

150 A - Model no.: RS3C15A□CL□

Mass: 11.0 kg
(Functional Safety model: 11.1 kg)

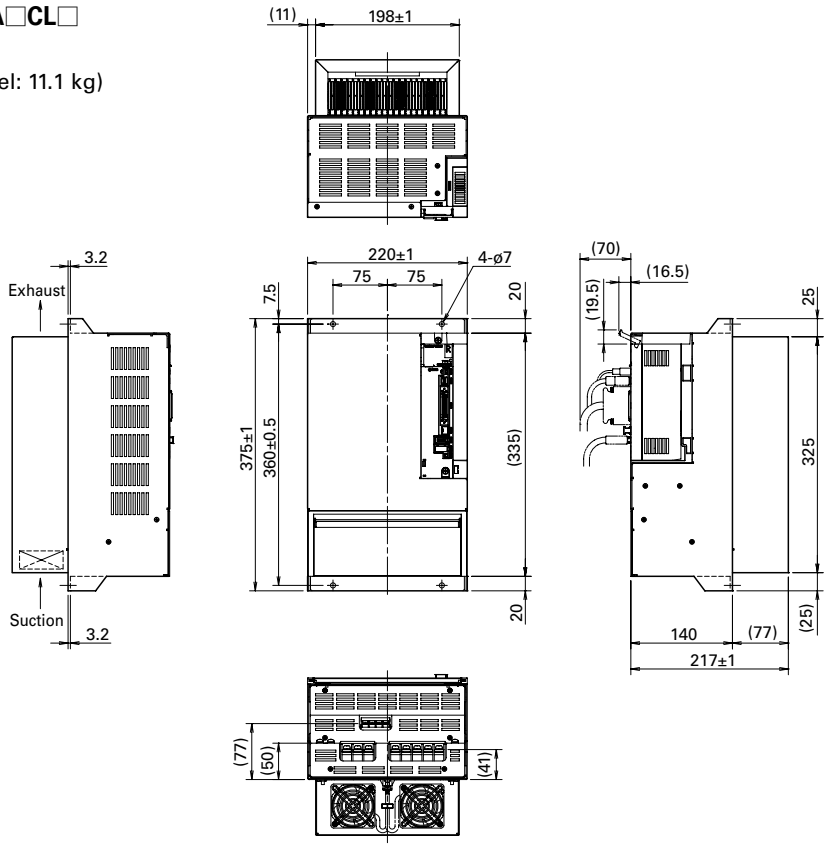

300 A - Model no.: RS3C30A□CM□

Mass: 18.0 kg
(Functional Safety model: 18.1 kg)

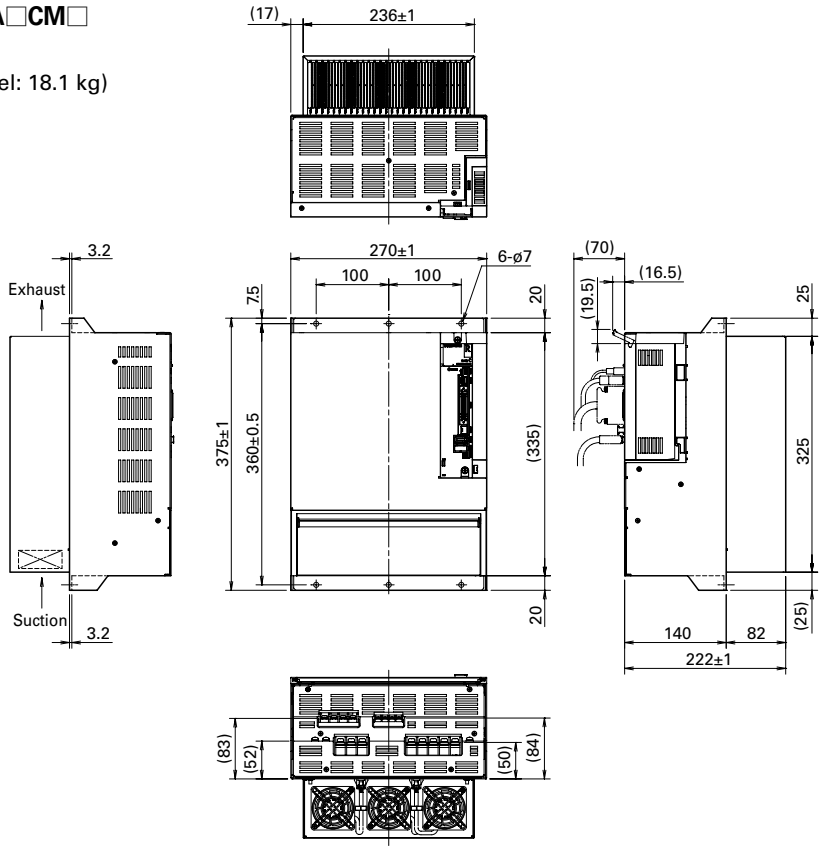

Dimensions [Unit: mm]

Parallel type

800 A

Amplifier unit model no.: RS3D80A□C□□
Mass: 32.5 kg

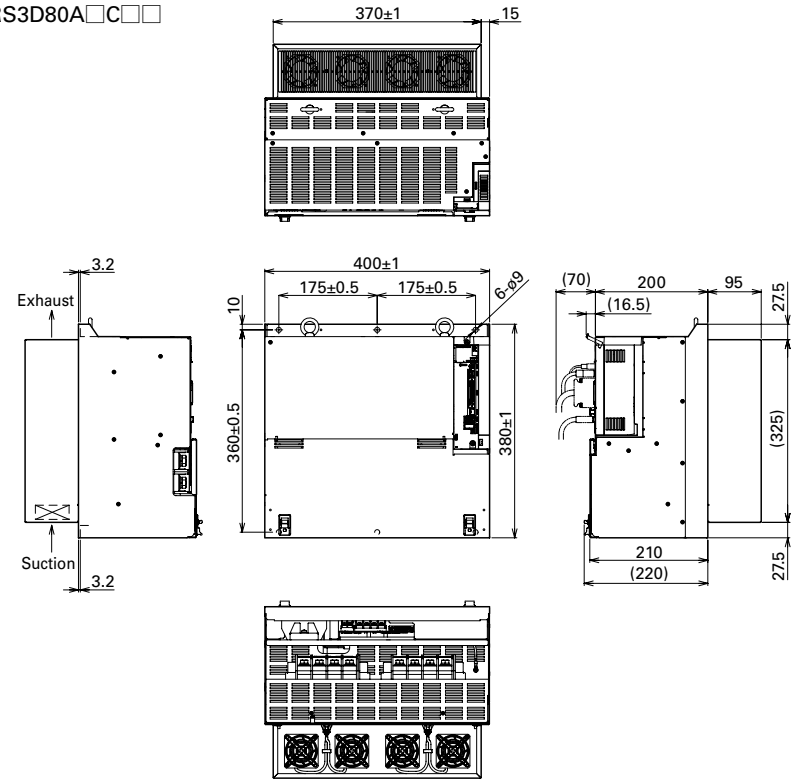

Power supply unit model no.: RS3PAC550
Mass: 23.0 kg

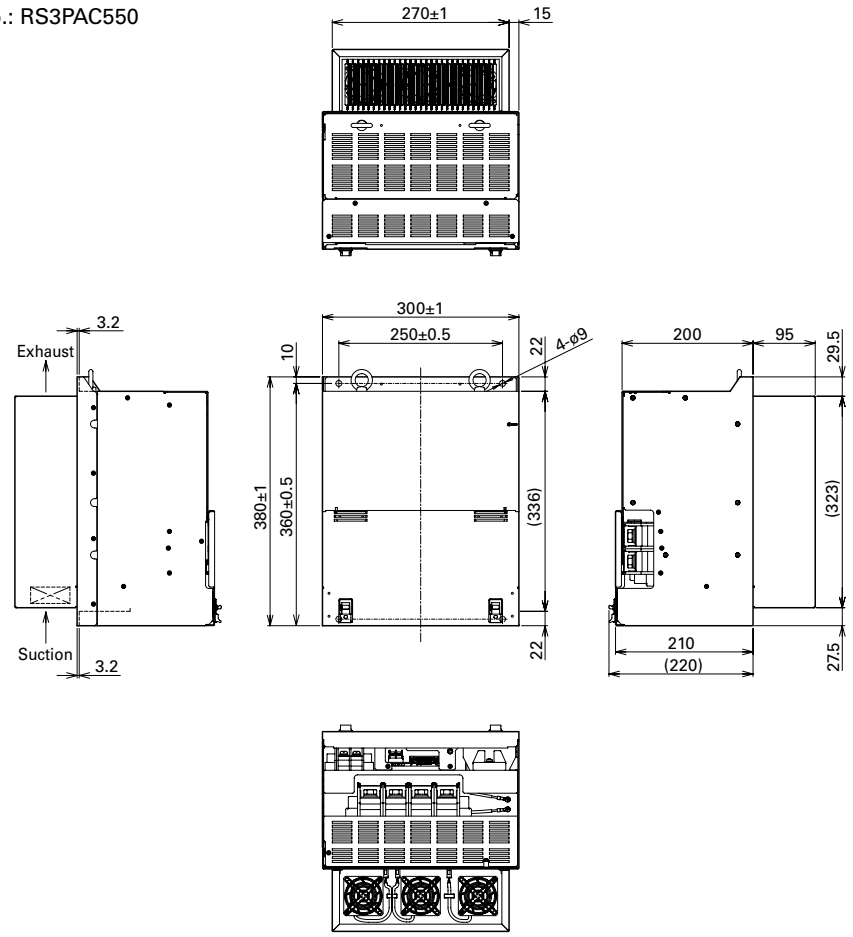

Serial type

25 A - Model no.: RS3C02A□F□□

Mass: 2.5 kg

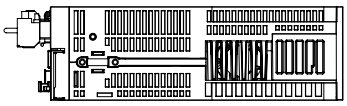

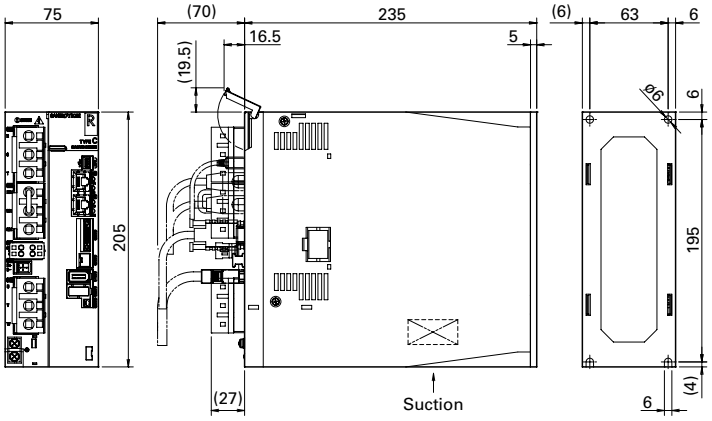

50 A - Model no.: RS3C05A□F□□

Mass: 4.7 kg

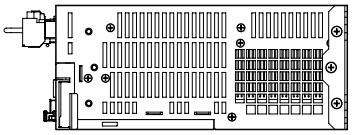

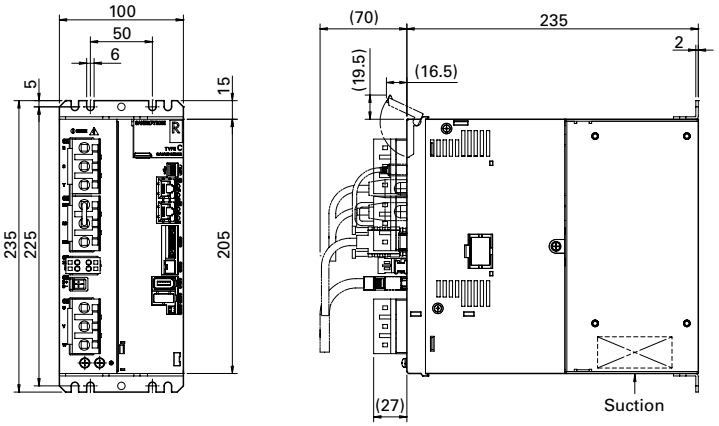

100 A - Model no.: RS3C10A□F□□

Mass: 8.5 kg

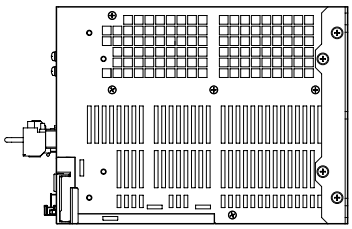

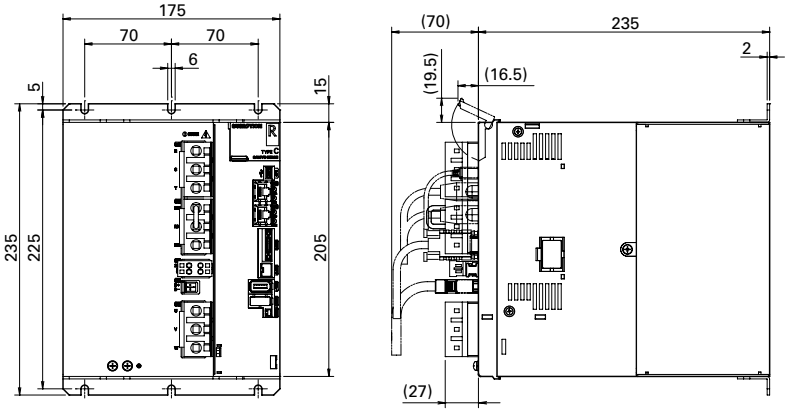

Dimensions [Unit: mm]

Serial type

150 A - Model no.: RS3C15A□FL□

Mass: 11.0 kg
(Functional Safety model: 11.1 kg)

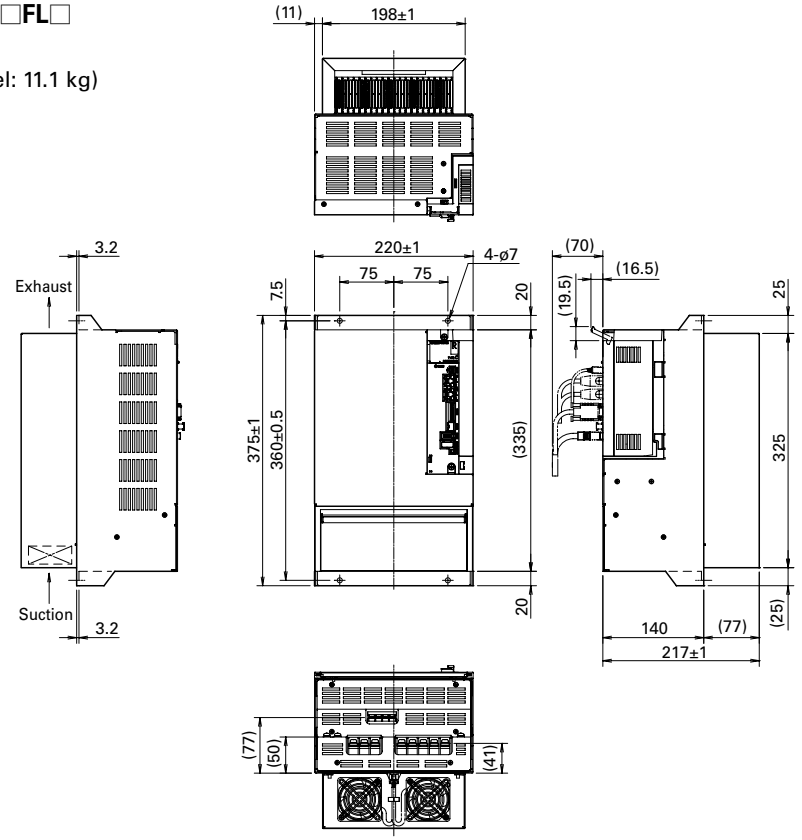

300 A - Model no.: RS3C30A□FM□

Mass: 18.0 kg
(Functional Safety model: 18.1 kg)

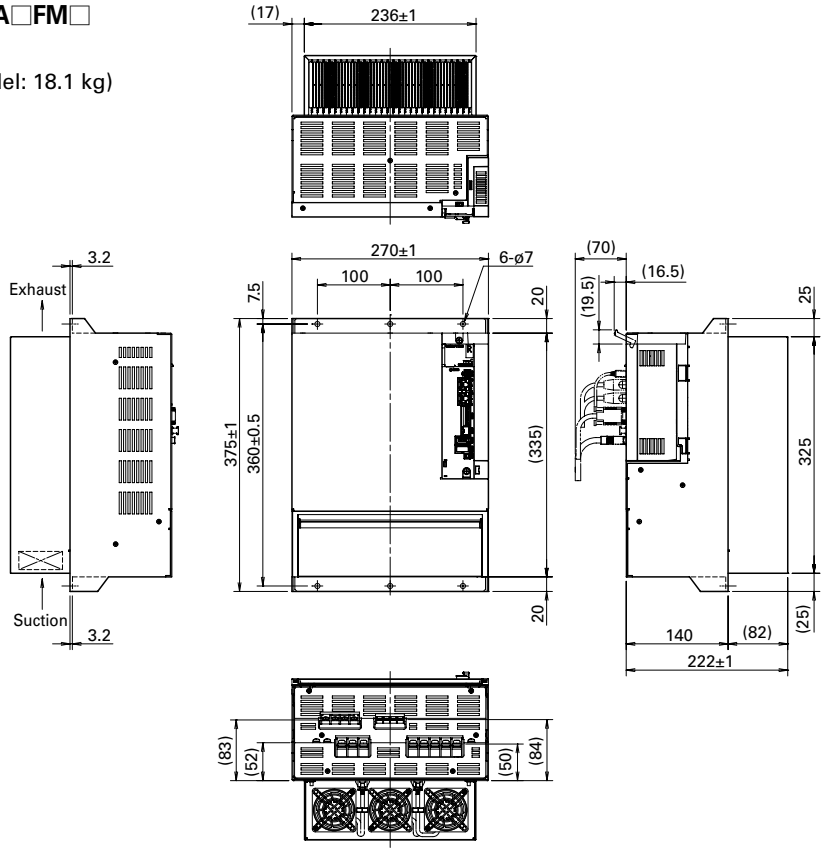

Serial type

800 A

Amplifier unit model no.: RS3D80A□F□□
Mass: 32.5 kg

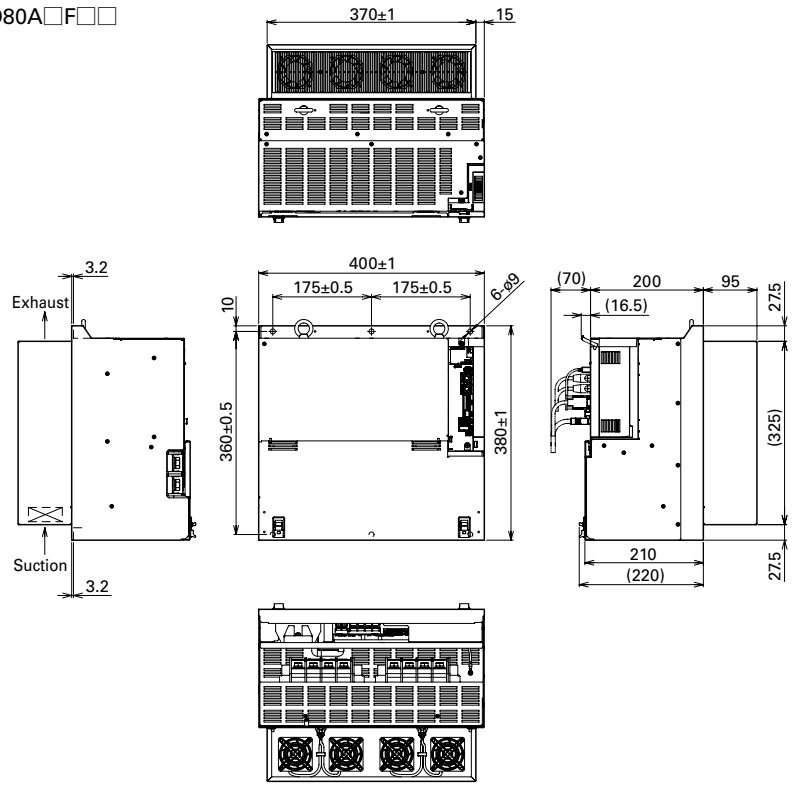

Power supply unit model no.: RS3PAC550
Mass: 23.0 kg

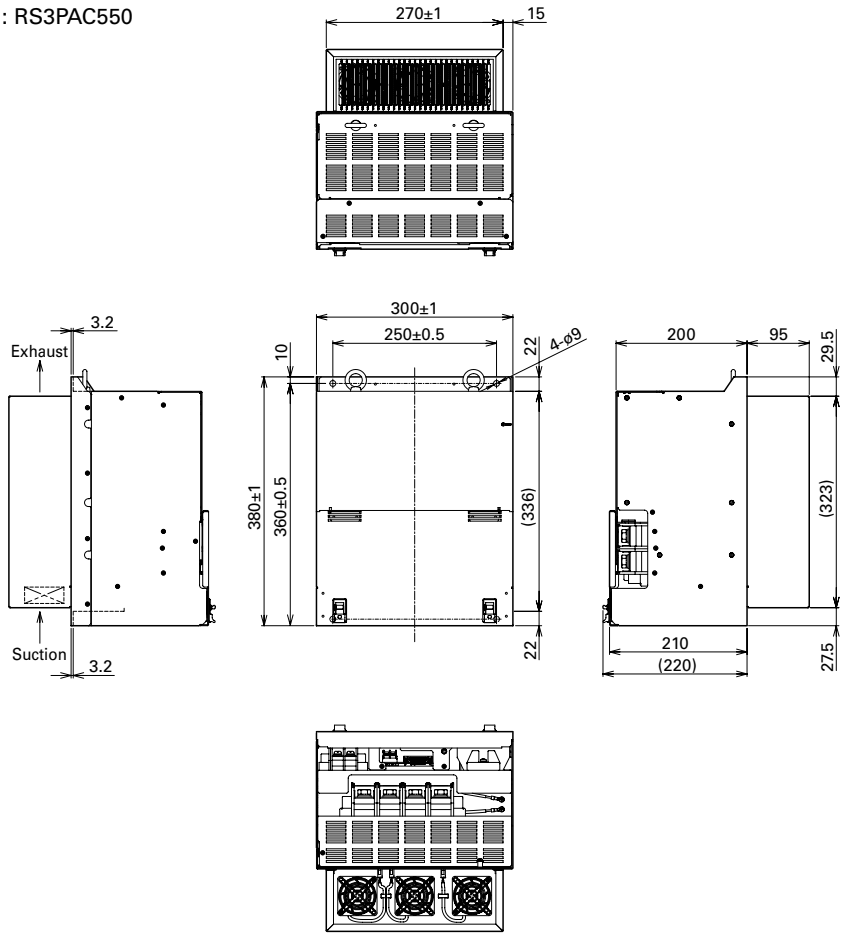

External Wiring Diagram

Parallel type 25 to 100 A, sink type (NPN) output

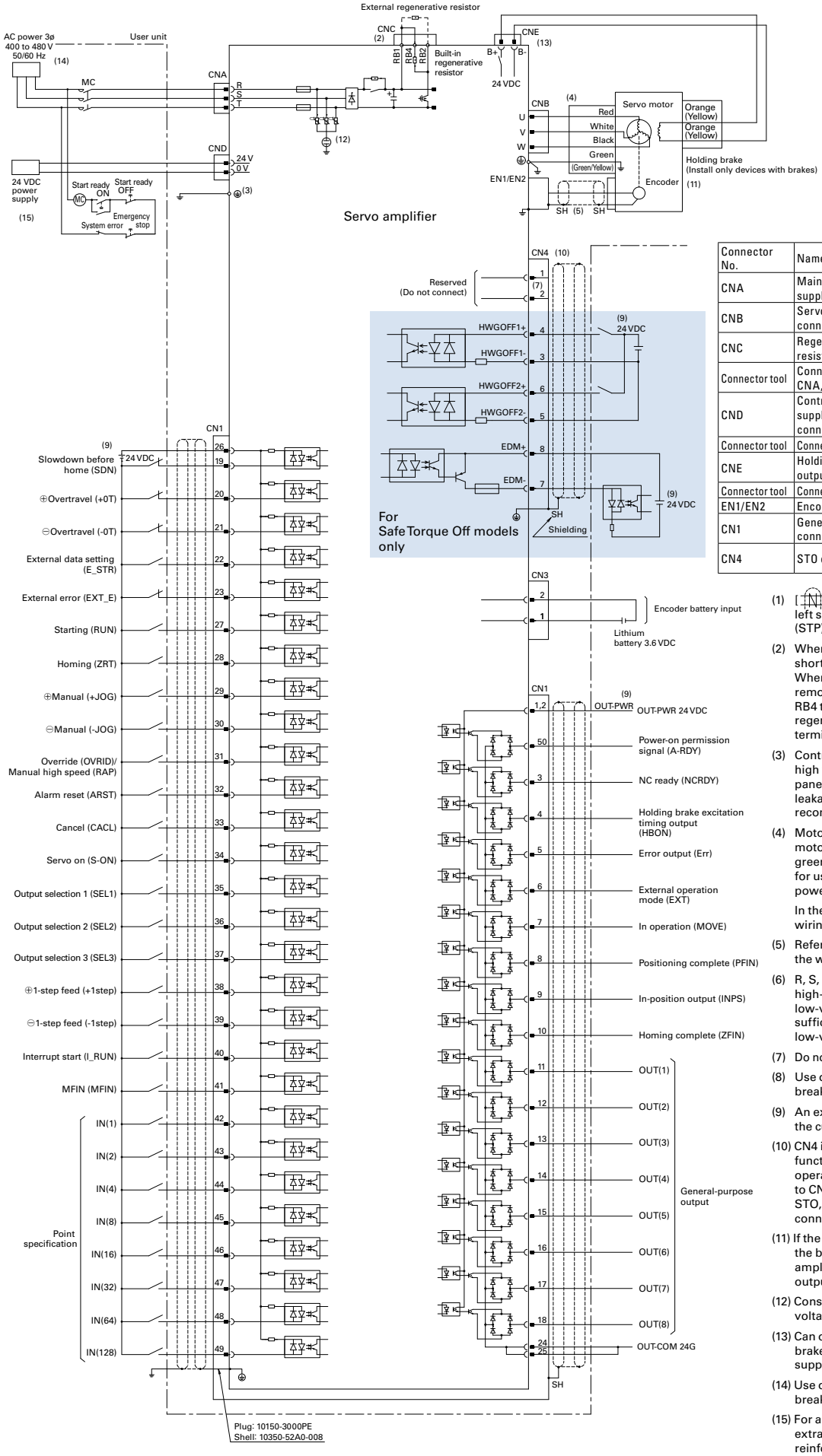

Connector No.	Name	Housing, plug, shell
CNA	Main circuit power supply connector	03JFAT-SAXGDK-P15
CNB	Servo motor power connector	03JFAT-SAZGDK-P15
CNC	Regenerative resistor connector	03JFAT-SAYGDK-P15
Connector tool	Connector tool for CNA, CNB, CNC	J-FAT-OT-P
CND	Control circuit power supply input connector	04JFAT-SAGG-G-KK
Connector tool	Connector tool for CND	J-FAT-OT (N)
CNE	Holding brake power output connector	02MJFAT-SAGF
Connector tool	Connector tool for CNE	MJFAT-OT
EN1/EN2	Encoder connector	54599-1019
CN1	General-purpose I/O connector	Plug: 10150-3000PE Shell: 10350-52A0-008
CN4	STO connector	For short-circuiting: 1971153-2 For wiring: 2013595-3

(1) [ ] The part indicated by the figure on the left should be wired with shielded twisted pair (STP) cables.

(2) When using the built-in regenerative resistor, short-circuit between RB1 and RB4 terminals. When using an external regenerative resistor, remove the shorting bar connected to RB1 and RB4 terminals, and then connect the external regenerative resistor between RB1 and RB2 terminals.

(3) Control panels must be grounded to prevent high voltages from damaging the operation panel or machines in case of an electrical leakage. (Grounding of class C or higher is recommended in Japan)

(4) Motor side connections vary depending on motor specifications. The red, white, black, green, and orange indicated in the figure are for use when the motor has lead-wire type power and brake lines.

In the case of a cannon plug type, perform wiring according to motor specifications.

(5) Refer to the encoder connection diagram for the wiring of encoder connectors.

(6) R, S, T, P, RB1, RB2, RB4, U, V, and W are high-voltage circuits. All other signal lines are low-voltage circuits. When wiring, provide sufficient clearance between high-voltage and low-voltage circuits.

(7) Do not connect anything to CN4-1 or CN4-2 pin.

(8) Use of a UL or IEC/EN compliant leakage circuit breaker is recommended.

(9) An external power supply is to be prepared by the customer.

(10) CN4 is a connector for the Safe Torque Off function. Turning Servo ON (motor in operation) requires to connect a safety device to CN4 and get STO enabled. When not using STO, be sure to insert the short-circuiting STO connector (Mfr. part no.: 1971153-2) to CN4.

(11) If the holding brake has a 24 V rated voltage, the brake can be directly powered by the amplifier's built-in holding brake power output, CNE.

(12) Consult us when conducting a withstand voltage test.

(13) Can only be used when the brake is a 24 V brake. Power is supplied by a 24 VDC power supply.

(14) Use of a UL or IEC/EN compliant leakage circuit breaker is recommended.

(15) For a 24 VDC power supply, use a SELV (safety extra low voltage) power supply with reinforced insulation on I/O terminals.

Parallel type 25 to 100 A, source type (PNP) output

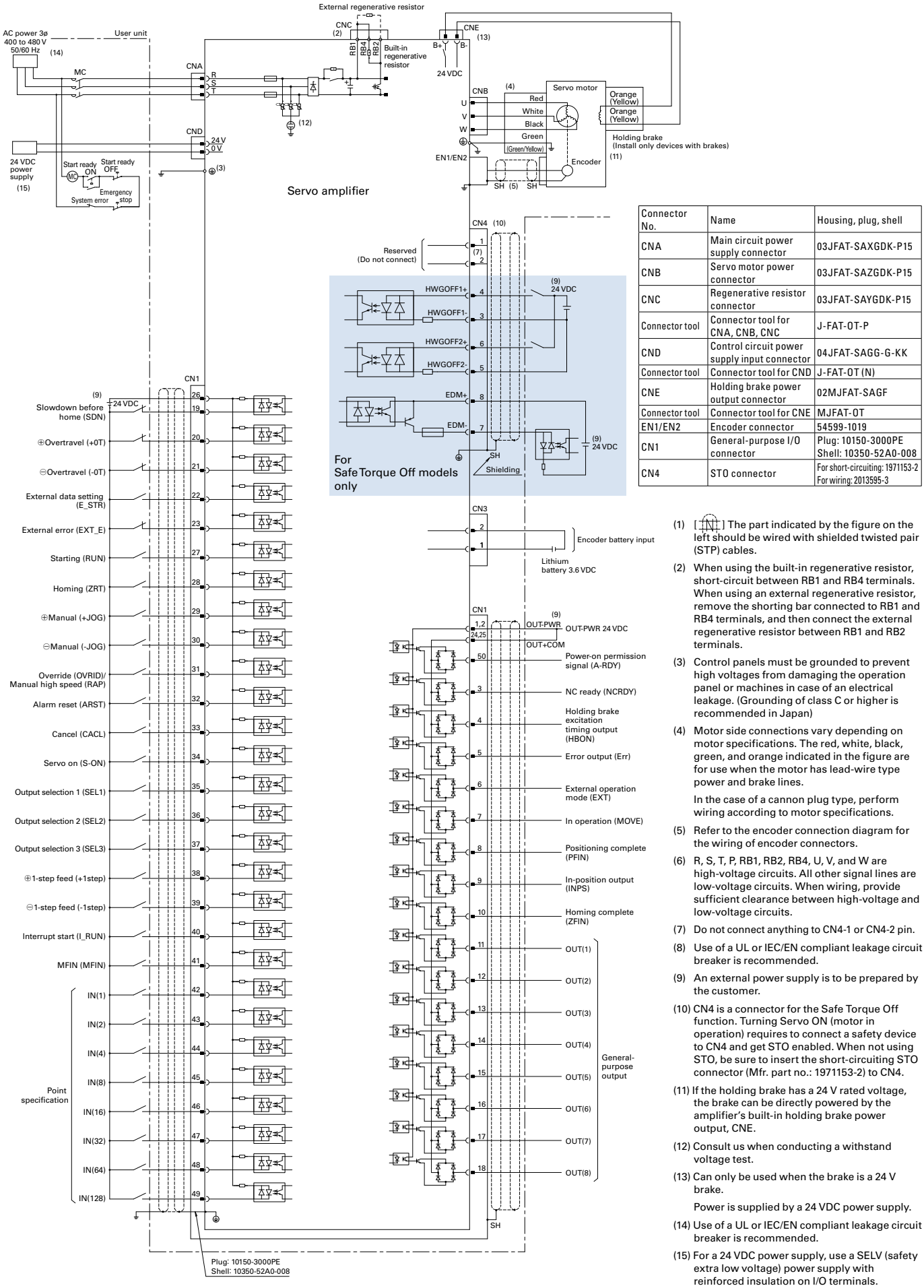

Connector No.	Name	Housing, plug, shell
CNA	Main circuit power supply connector	03JFAT-SAXGDK-P15
CNB	Servo motor power connector	03JFAT-SAZGDK-P15
CNC	Regenerative resistor connector	03JFAT-SAYGDK-P15
Connector tool	Connector tool for CNA, CNB, CNC	J-FAT-OT-P
CND	Control circuit power supply input connector	04JFAT-SAGG-G-KK
Connector tool	Connector tool for CND	J-FAT-OT (N)
CNE	Holding brake power output connector	02MJFAT-SAGF
Connector tool	Connector tool for CNE	MJFAT-OT
EN1/EN2	Encoder connector	54599-1019
CN1	General-purpose I/O connector	Plug: 10150-3000PE Shell: 10350-52A0-008
CN4	STO connector	For short-circuiting: 1971153-2 For wiring: 2013595-3

(1) [ ] The part indicated by the figure on the left should be wired with shielded twisted pair (STP) cables.

(2) When using the built-in regenerative resistor, short-circuit between RB1 and RB4 terminals. When using an external regenerative resistor, remove the shorting bar connected to RB1 and RB4 terminals, and then connect the external regenerative resistor between RB1 and RB2 terminals.

(3) Control panels must be grounded to prevent high voltages from damaging the operation panel or machines in case of an electrical leakage. (Grounding of class C or higher is recommended in Japan)

(4) Motor side connections vary depending on motor specifications. The red, white, black, green, and orange indicated in the figure are for use when the motor has lead-wire type power and brake lines.

In the case of a cannon plug type, perform wiring according to motor specifications.

(5) Refer to the encoder connection diagram for the wiring of encoder connectors.

(6) R, S, T, P, RB1, RB2, RB4, U, V, and W are high-voltage circuits. All other signal lines are low-voltage circuits. When wiring, provide sufficient clearance between high-voltage and low-voltage circuits.

(7) Do not connect anything to CN4-1 or CN4-2 pin.

(8) Use of a UL or IEC/EN compliant leakage circuit breaker is recommended.

(9) An external power supply is to be prepared by the customer.

(10) CN4 is a connector for the Safe Torque Off function. Turning Servo ON (motor in operation) requires to connect a safety device to CN4 and get STO enabled. When not using STO, be sure to insert the short-circuiting STO connector (Mfr. part no.: 1971153-2) to CN4.

(11) If the holding brake has a 24 V rated voltage, the brake can be directly powered by the amplifier's built-in holding brake power output, CNE.

(12) Consult us when conducting a withstand voltage test.

(13) Can only be used when the brake is a 24 V brake.

Power is supplied by a 24 VDC power supply.

(14) Use of a UL or IEC/EN compliant leakage circuit breaker is recommended.

(15) For a 24 VDC power supply, use a SELV (safety extra low voltage) power supply with reinforced insulation on I/O terminals.

External Wiring Diagram

Parallel type 150, 300 A, sink type (NPN) output

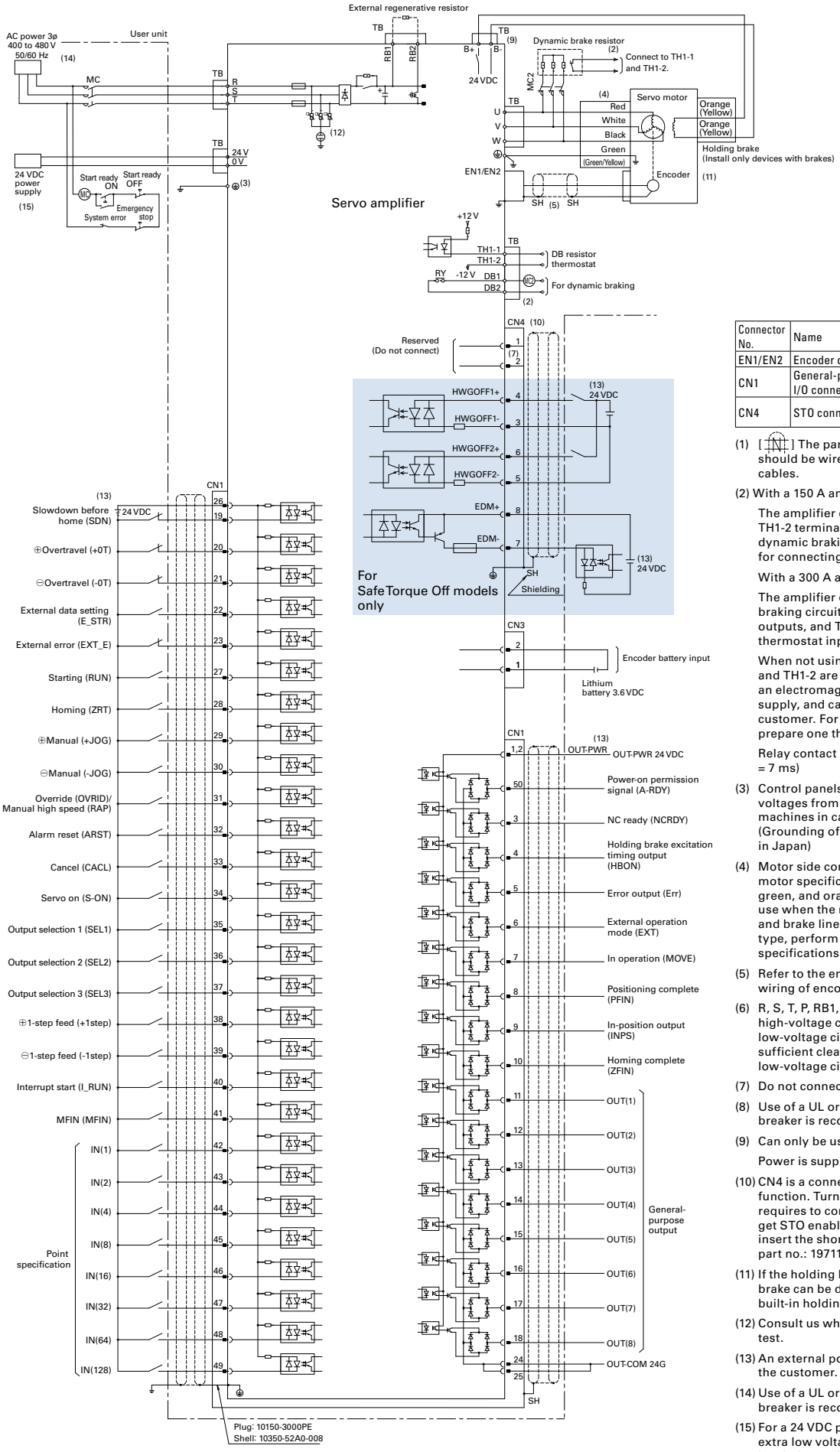

Connector No.	Name	Housing, plug, shell
EN1/EN2	Encoder connector	54599-1019
CN1	General-purpose I/O connector	Plug: 10150-3000PE Shell: 10350-52A0-008
CN4	STO connector	For short-circuiting: 1971153-2 For wiring: 2013595-3

(1) [ ] The part indicated by the figure on the left should be wired with shielded twisted pair (STP) cables.

(2) With a 150 A amplifier

The amplifier does not have DB1, DB2, TH1-1, or TH1-2 terminal block. The amplifier has a built-in dynamic braking (DB) circuit, so there is no need for connecting an external DB resistor.

With a 300 A amplifier

The amplifier does not have a built-in dynamic braking circuit. DB1 and DB2 are DB timing outputs, and TH1-1 and TH1-2 are DB resistor thermostat inputs.

When not using a thermostat, ensure that TH1-1 and TH1-2 are short-circuited. Necessary items, an electromagnetic contactor, resistor, power supply, and cable, are to be prepared by the customer. For the electromagnetic contactor, prepare one that works with DC power.

Relay contact rating: 30 VDC, 2 A (cosø = 0.4, L/R = 7 ms)

(3) Control panels must be grounded to prevent high voltages from damaging the operation panel or machines in case of an electrical leakage. (Grounding of class C or higher is recommended in Japan)

(4) Motor side connections vary depending on motor specifications. The red, white, black, green, and orange indicated in the figure are for use when the motor has lead-wire type power and brake lines. In the case of a cannon plug type, perform wiring according to motor specifications.

(5) Refer to the encoder connection diagram for the wiring of encoder connectors.

(6) R, S, T, P, RB1, RB2, RB4, U, V, and W are high-voltage circuits. All other signal lines are low-voltage circuits. When wiring, provide sufficient clearance between high-voltage and low-voltage circuits.

(7) Do not connect anything to CN4-1 or CN4-2 pin.

(8) Use of a UL or IEC/EN compliant leakage circuit breaker is recommended.

(9) Can only be used when the brake is a 24 V brake.

Power is supplied by a 24 VDC power supply.

(10) CN4 is a connector for the Safe Torque Off function. Turning Servo ON (motor in operation) requires to connect a safety device to CN4 and get STO enabled. When not using STO, be sure to insert the short-circuiting STO connector (Mfr. part no.: 1971153-2) to CN4.

(11) If the holding brake has a 24 V rated voltage, the brake can be directly powered by the amplifier's built-in holding brake power output, CNE.

(12) Consult us when conducting a withstand voltage test.

(13) An external power supply is to be prepared by the customer.

(14) Use of a UL or IEC/EN compliant leakage circuit breaker is recommended.

(15) For a 24 VDC power supply, use a SELV (safety extra low voltage) power supply with reinforced insulation on I/O terminals.

Parallel type 150, 300 A, source type (PNP) output

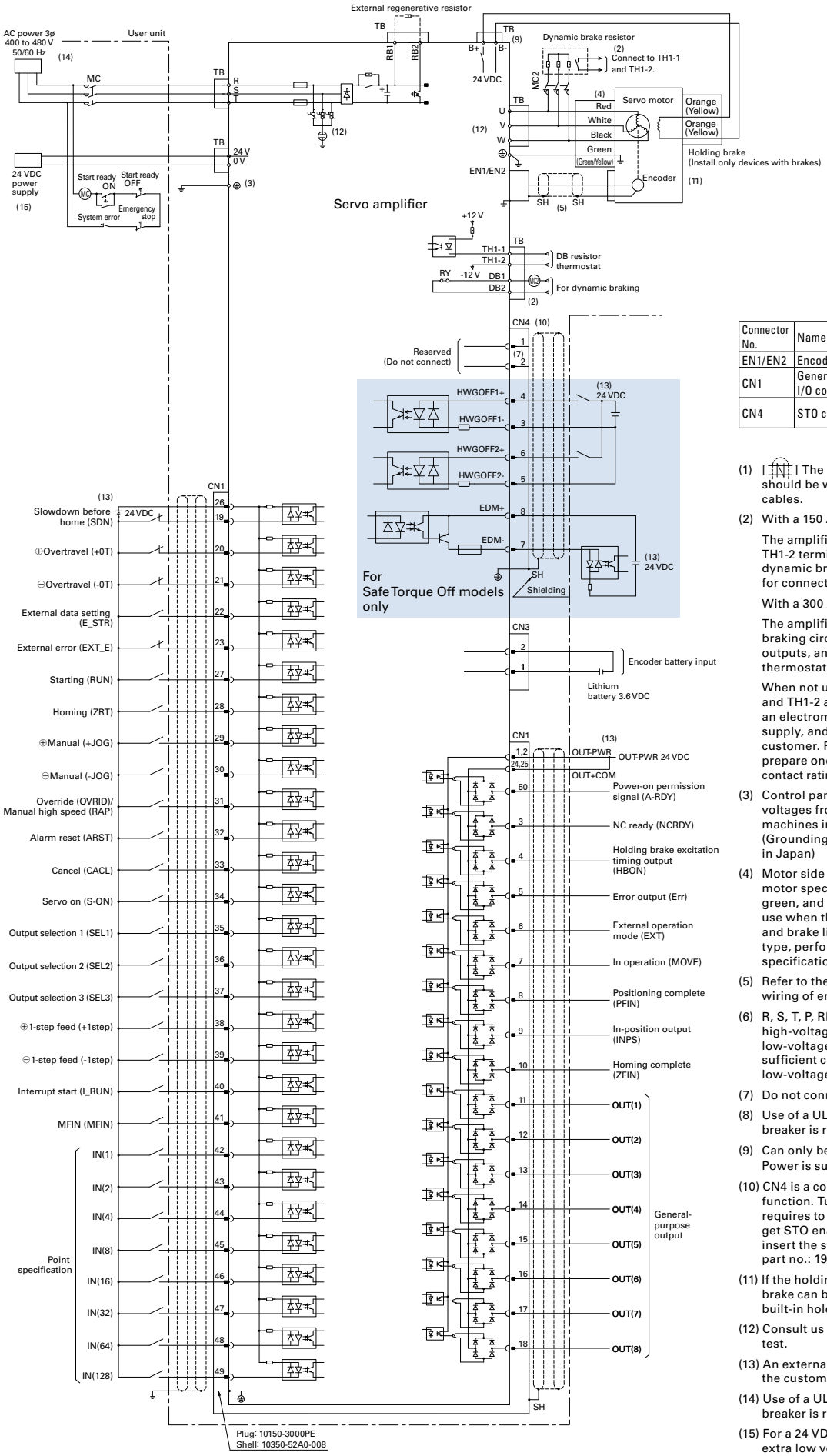

Connector No.	Name	Housing, plug, shell
EN1/EN2	Encoder connector	54599-1019
CN1	General-purpose I/O connector	Plug: 10150-3000PE Shell: 10350-52A0-008
CN4	STO connector	For short-circuiting: 1971153-2 For wiring: 2013595-3

(1) [ ] The part indicated by the figure on the left should be wired with shielded twisted pair (STP) cables.

(2) With a 150 A amplifier

The amplifier does not have DB1, DB2, TH1-1, or TH1-2 terminal block. The amplifier has a built-in dynamic braking (DB) circuit, so there is no need for connecting an external DB resistor.

With a 300 A amplifier

The amplifier does not have a built-in dynamic braking circuit. DB1 and DB2 are DB timing outputs, and TH1-1 and TH1-2 are DB resistor thermostat inputs.

When not using a thermostat, ensure that TH1-1 and TH1-2 are short-circuited. Necessary items, an electromagnetic contactor, resistor, power supply, and cable, are to be prepared by the customer. For the electromagnetic contactor, prepare one that works with DC power. Relay contact rating: 30 VDC, 2 A (cosø = 0.4, L/R = 7 ms)

(3) Control panels must be grounded to prevent high voltages from damaging the operation panel or machines in case of an electrical leakage. (Grounding of class C or higher is recommended in Japan)

(4) Motor side connections vary depending on motor specifications. The red, white, black, green, and orange indicated in the figure are for use when the motor has lead-wire type power and brake lines. In the case of a cannon plug type, perform wiring according to motor specifications.

(5) Refer to the encoder connection diagram for the wiring of encoder connectors.

(6) R, S, T, P, RB1, RB2, RB4, U, V, and W are high-voltage circuits. All other signal lines are low-voltage circuits. When wiring, provide sufficient clearance between high-voltage and low-voltage circuits.

(7) Do not connect anything to CN4-1 or CN4-2 pin.

(8) Use of a UL or IEC/EN compliant leakage circuit breaker is recommended.

(9) Can only be used when the brake is a 24 V brake. Power is supplied by a 24 VDC power supply.

(10) CN4 is a connector for the Safe Torque Off function. Turning Servo ON (motor in operation) requires to connect a safety device to CN4 and get STO enabled. When not using STO, be sure to insert the short-circuiting STO connector (Mfr. part no.: 1971153-2) to CN4.

(11) If the holding brake has a 24 V rated voltage, the brake can be directly powered by the amplifier's built-in holding brake power output, CNE.

(12) Consult us when conducting a withstand voltage test.

(13) An external power supply is to be prepared by the customer.

(14) Use of a UL or IEC/EN compliant leakage circuit breaker is recommended.

(15) For a 24 VDC power supply, use a SELV (safety extra low voltage) power supply with reinforced insulation on I/O terminals.

External Wiring Diagram

Parallel type 800 A, sink type (NPN) output

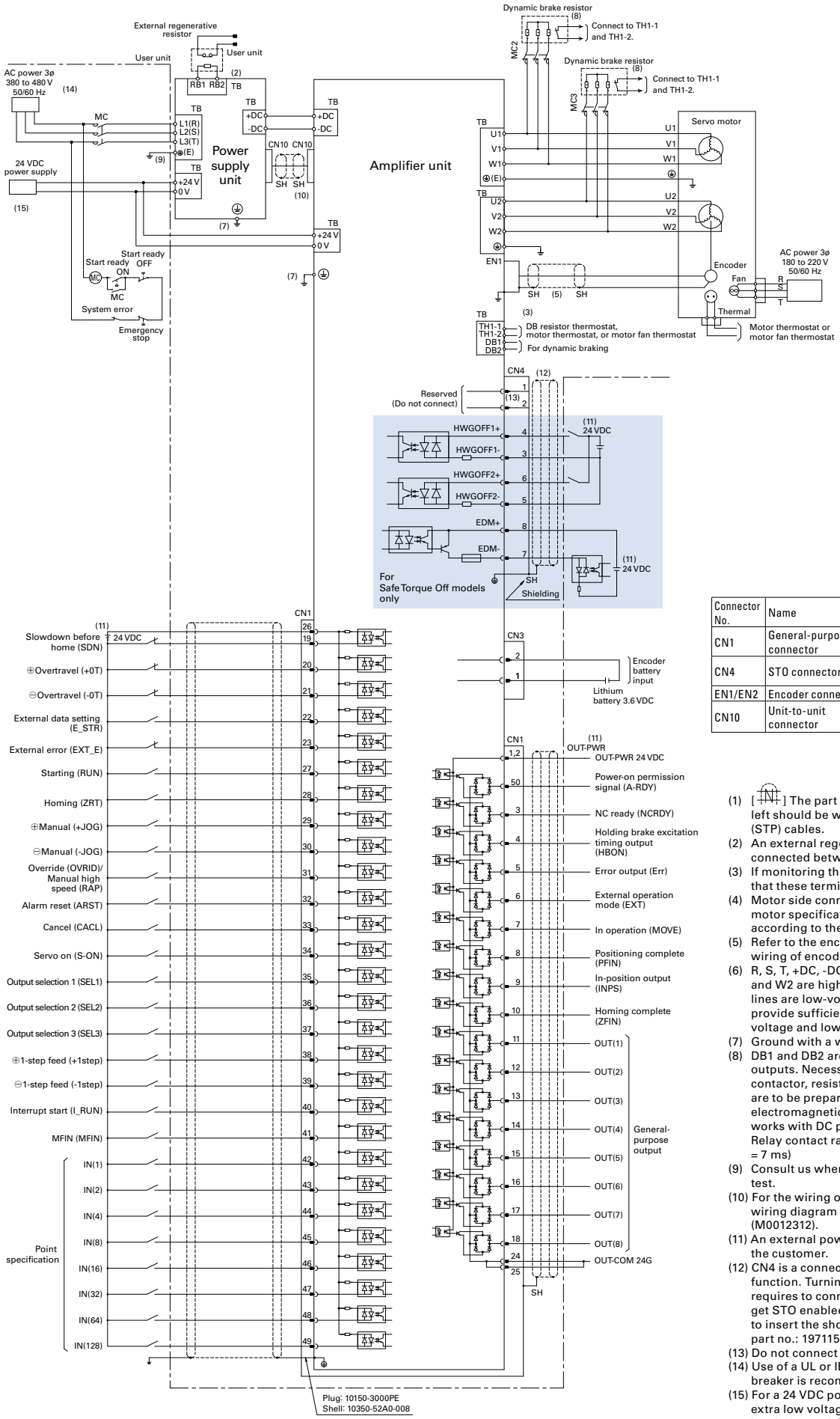

Connector No.	Name	Housing, plug, shell
CN1	General-purpose I/O connector	Plug: 10150-3000PE Shell: 10350-52A0-008
CN4	STO connector	For short-circuiting: 1971153-2 For wiring: 2013595-3
EN1/EN2	Encoder connector	54599-1019
CN10	Unit-to-unit connector	Connector: DF02P036F22A1 Shell: DF02D036A22

(1) [ ] The part indicated by the figure on the left should be wired with shielded twisted pair (STP) cables.
(2) An external regenerative resistor should be connected between the RB1 and RB2 terminals.
(3) If monitoring thermostats by yourself, ensure that these terminals are short-circuited.
(4) Motor side connections vary depending on motor specifications. Perform connections according to the specifications.
(5) Refer to the encoder connection diagram for the wiring of encoder connectors.
(6) R, S, T, +DC, -DC, RB1, RB2, U1, V1, W1, U2, V2, and W2 are high-voltage circuits. All other signal lines are low-voltage circuits. When wiring, provide sufficient clearance between high-voltage and low-voltage circuits.
(7) Ground with a wire of 5.5 mm² or larger size.
(8) DB1 and DB2 are dynamic braking timing outputs. Necessary items, an electromagnetic contactor, resistor, power supply, and cables, are to be prepared by the customer. For the electromagnetic contactor, prepare one that works with DC power.
Relay contact rating: 30 VDC, 2 A (cosø = 0.4, L/R = 7 ms)
(9) Consult us when conducting a withstand voltage test.
(10) For the wiring of unit-to-unit cables, refer to the wiring diagram in the Instruction Manual (M0012312).
(11) An external power supply is to be prepared by the customer.
(12) CN4 is a connector for the Safe Torque Off function. Turning Servo ON (motor in operation) requires to connect a safety device to CN4 and get STO enabled. When not using STO, be sure to insert the short-circuiting STO connector (Mfr. part no.: 1971153-2) to CN4.
(13) Do not connect anything to CN4-1 or CN4-2 pin.
(14) Use of a UL or IEC/EN compliant leakage circuit breaker is recommended.
(15) For a 24 VDC power supply, use a SELV (safety extra low voltage) power supply with reinforced insulation on I/O terminals.

Parallel type 800 A, source type (PNP) output

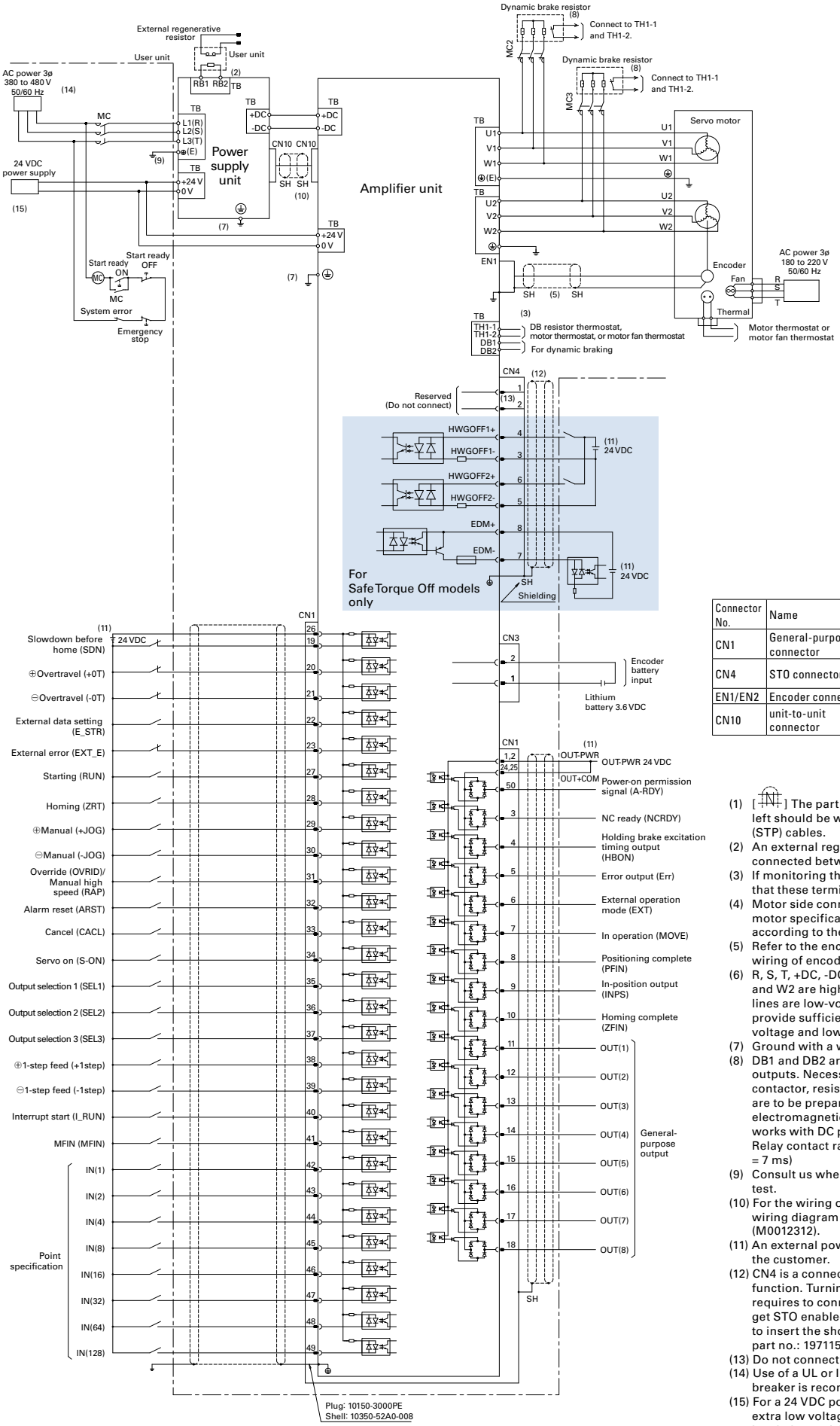

Connector No.	Name	Housing, plug, shell
CN1	General-purpose I/O connector	Plug: 10150-3000PE Shell: 10350-52A0-008
CN4	STO connector	For short-circuiting: 1971153-2 For wiring: 2013595-3
EN1/EN2	Encoder connector	54599-1019
CN10	unit-to-unit connector	Connector: DF02P036F22A1 Shell: DF02D036A22

(1) [ ] The part indicated by the figure on the left should be wired with shielded twisted pair (STP) cables.
(2) An external regenerative resistor should be connected between the RB1 and RB2 terminals.
(3) If monitoring thermostats by yourself, ensure that these terminals are short-circuited.
(4) Motor side connections vary depending on motor specifications. Perform connections according to the specifications.
(5) Refer to the encoder connection diagram for the wiring of encoder connectors.
(6) R, S, T, +DC, -DC, RB1, RB2, U1, V1, W1, U2, V2, and W2 are high-voltage circuits. All other signal lines are low-voltage circuits. When wiring, provide sufficient clearance between high-voltage and low-voltage circuits.
(7) Ground with a wire of 5.5 mm² or larger size.
(8) DB1 and DB2 are dynamic braking timing outputs. Necessary items, an electromagnetic contactor, resistor, power supply, and cables, are to be prepared by the customer. For the electromagnetic contactor, prepare one that works with DC power.
Relay contact rating: 30 VDC, 2 A (cosø = 0.4, L/R = 7 ms)
(9) Consult us when conducting a withstand voltage test.
(10) For the wiring of unit-to-unit cables, refer to the wiring diagram in the Instruction Manual (M0012312).
(11) An external power supply is to be prepared by the customer.
(12) CN4 is a connector for the Safe Torque Off function. Turning Servo ON (motor in operation) requires to connect a safety device to CN4 and get STO enabled. When not using STO, be sure to insert the short-circuiting STO connector (Mfr. part no.: 1971153-2) to CN4.
(13) Do not connect anything to CN4-1 or CN4-2 pin.
(14) Use of a UL or IEC/EN compliant leakage circuit breaker is recommended.
(15) For a 24 VDC power supply, use a SELV (safety extra low voltage) power supply with reinforced insulation on I/O terminals.

External Wiring Diagram

Serial type 25 to 100 A

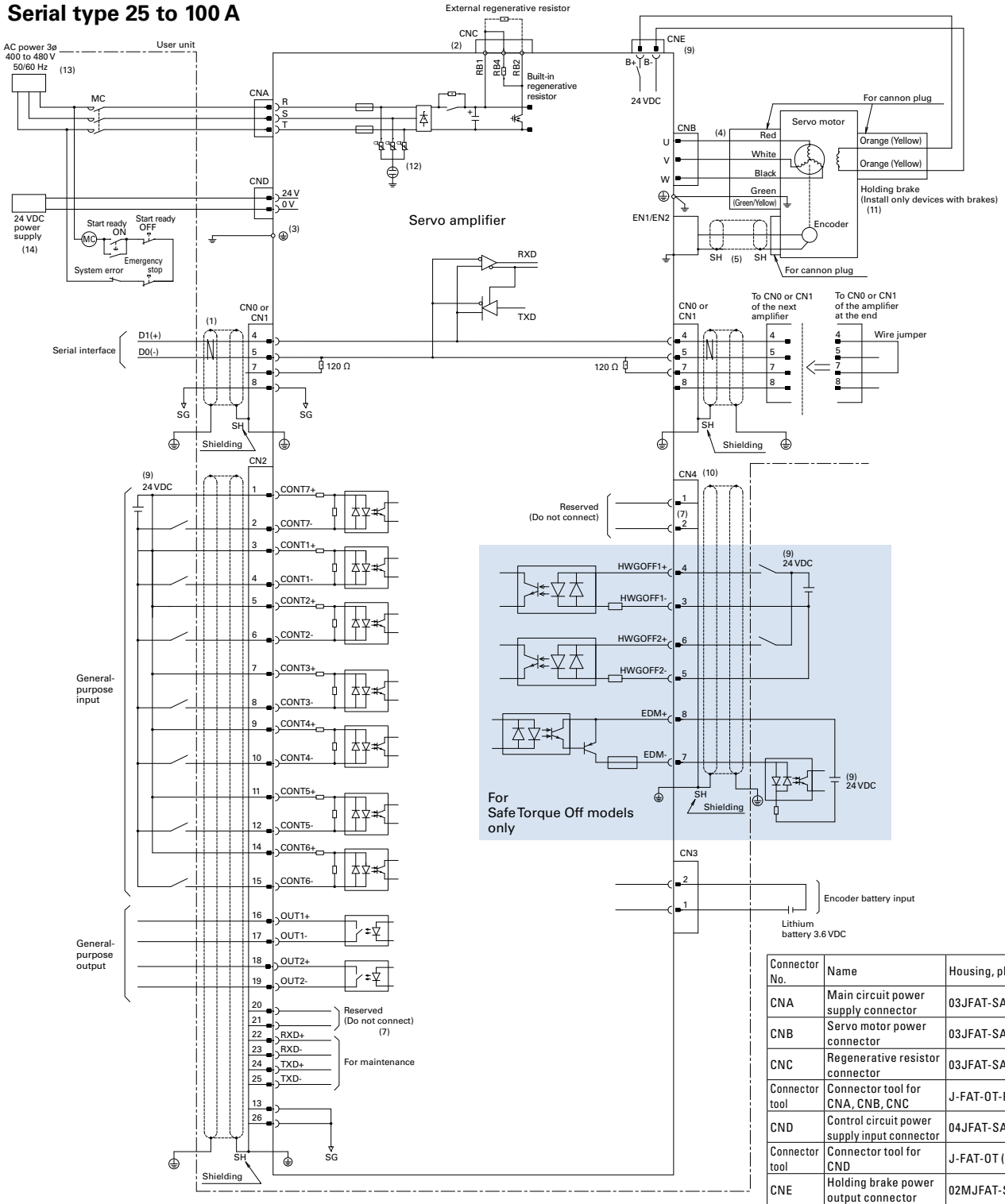

Connector No.	Name	Housing, plug, shell
CNA	Main circuit power supply connector	03JFAT-SAXGDK-P15
CNB	Servo motor power connector	03JFAT-SAZGDK-P15
CNC	Regenerative resistor connector	03JFAT-SAYGDK-P15
Connector tool	Connector tool for CNA, CNB, CNC	J-FAT-OT-P
CND	Control circuit power supply input connector	04JFAT-SAGG-G-KK
Connector tool	Connector tool for CND	J-FAT-OT (N)
CNE	Holding brake power output connector	02MJFAT-SAGF
Connector tool	Connector tool for CNE	MJFAT-OT
EN1/EN2	Encoder connector	54599-1019
CN2	General-purpose I/O connector	Connector: HDR-E26MSG1+ Shell kit: HDR-E26LPH
CN4	STO connector	For short-circuiting: 1971153-2 For wiring: 2013595-3

(1) [ ] The part indicated by the figure on the left should be wired with shielded twisted pair (STP) cables.

(2) When using the built-in regenerative resistor, short-circuit between RB1 and RB4 terminals. When using an external regenerative resistor, remove the shorting bar connected to RB1 and RB4 terminals, and then connect the external regenerative resistor between RB1 and RB2 terminals.

(3) Control panels must be grounded to prevent high voltages from damaging the operation panel or machines in case of an electrical leakage. (Grounding of class C or higher is recommended in Japan)

(4) Motor side connections vary depending on motor specifications. The red, white, black, green, and orange indicated in the figure are for use when the motor has lead-wire type power and brake lines. In the case of a cannon plug type, perform wiring according to motor specifications.

(5) Refer to the encoder connection diagram for the wiring of encoder connectors.

(6) R, S, T, P, RB1, RB2, RB4, U, V, and W are high-voltage circuits. All other signal lines are low-voltage circuits. When wiring, provide sufficient clearance between high-voltage and low-voltage circuits.

(7) Do not connect anything to the CN4-1, CN4-2, CN2-20, or CN2-21 pins.

(8) Use of a UL or IEC/EN compliant leakage circuit breaker is recommended.

(9) An external power supply is to be prepared by the customer.

(10) CN4 is a connector for the Safe Torque Off function. Turning Servo ON (motor in operation) requires to connect a safety device to CN4 and get STO enabled. When not using STO, be sure to insert the short-circuiting STO connector (Mfr. part no.: 1971153-2) to CN4.

(11) If the holding brake has a 24 V rated voltage, the brake can be directly powered by the amplifier's built-in holding brake power output, CNE.

(12) Consult us when conducting a withstand voltage test.

(13) Use of a UL or IEC/EN compliant leakage circuit breaker is recommended.

(14) For a 24 VDC power supply, use a SELV (safety extra low voltage) power supply with reinforced insulation on I/O terminals.

Serial type 150, 300 A

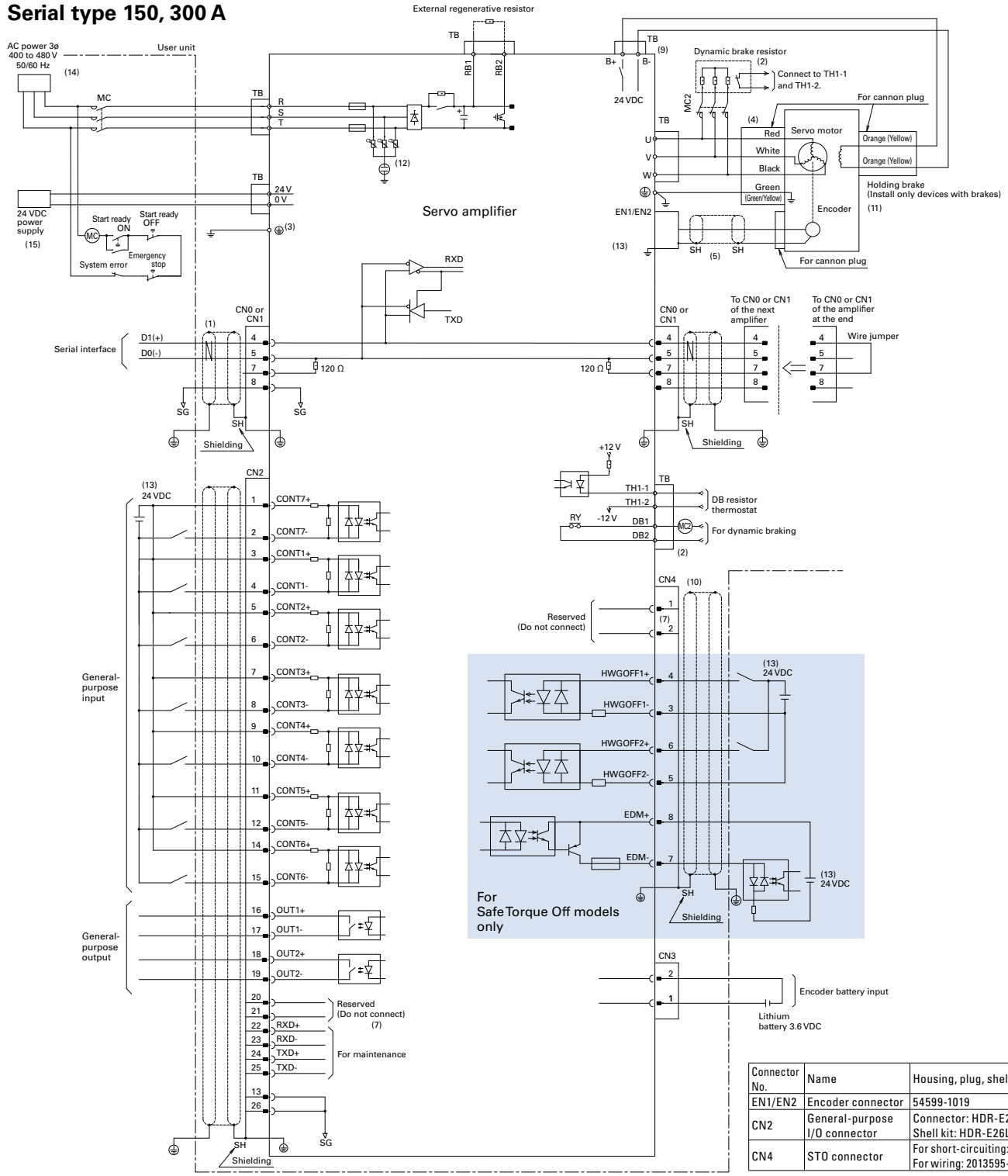

Connector No.	Name	Housing, plug, shell
EN1/EN2	Encoder connector	54599-1019
CN2	General-purpose I/O connector	Connector: HDR-E26MSG1+ Shell kit: HDR-E26LPH
CN4	STO connector	For short-circuiting: 1971153-2 For wiring: 2013595-3

(1) [ ] The part indicated by the figure on the left should be wired with shielded twisted pair (STP) cables.

(2) With a 150 A amplifier
The amplifier does not have DB1, DB2, TH1-1, or TH1-2 terminal block. The amplifier has a built-in dynamic braking (DB) circuit, so there is no need for connecting an external DB resistor.
With a 300 A amplifier
The amplifier does not have a built-in dynamic braking circuit. DB1 and DB2 are DB timing outputs, and TH1-1 and TH1-2 are DB resistor thermostat inputs.
When not using a thermostat, ensure that TH1-1 and TH1-2 are short-circuited. Necessary items, an electromagnetic contactor, resistor, power supply, and cable, are to be prepared by the customer. For the electromagnetic contactor, prepare one that works with DC power. Relay contact rating: 30 VDC, 2 A (cosø = 0.4, L/R = 7 ms)

(3) Control panels must be grounded to prevent high voltages from damaging the operation panel or machines in case of an electrical leakage. (Grounding of class C or higher is recommended in Japan)

(4) Motor side connections vary depending on motor specifications. The red, white, black, green, and orange indicated in the figure are for use when the motor has lead-wire type power and brake lines. In the case of a cannon plug type, perform wiring according to motor specifications.

(5) Refer to the encoder connection diagram for the wiring of encoder connectors.

(6) R, S, T, P, RB1, RB2, RB4, U, V, and W are high-voltage circuits. All other signal lines are low-voltage circuits. When wiring, provide sufficient clearance between high-voltage and low-voltage circuits.

(7) Do not connect anything to the CN4-1, CN4-2, CN2-20, or CN2-21 pins.

(8) Use of a UL or IEC/EN compliant leakage circuit breaker is recommended.

(9) Can only be used when the brake is a 24 V brake. Power is supplied by a 24 VDC power supply.

(10) CN4 is a connector for the Safe Torque Off function. Turning Servo ON (motor in operation) requires to connect a safety device to CN4 and get STO enabled. When not using STO, be sure to insert the short-circuiting STO connector (Mfr. part no.: 1971153-2) to CN4.

(11) If the holding brake has a 24 V rated voltage, the brake can be directly powered by the amplifier's built-in holding brake power output, CNE.

(12) Consult us when conducting a withstand voltage test.

(13) An external power supply is to be prepared by the customer.

(14) Use of a UL or IEC/EN compliant leakage circuit breaker is recommended.

(15) For a 24 VDC power supply, use a SELV (safety extra low voltage) power supply with reinforced insulation on I/O terminals.

External Wiring Diagram

Serial type 800 A

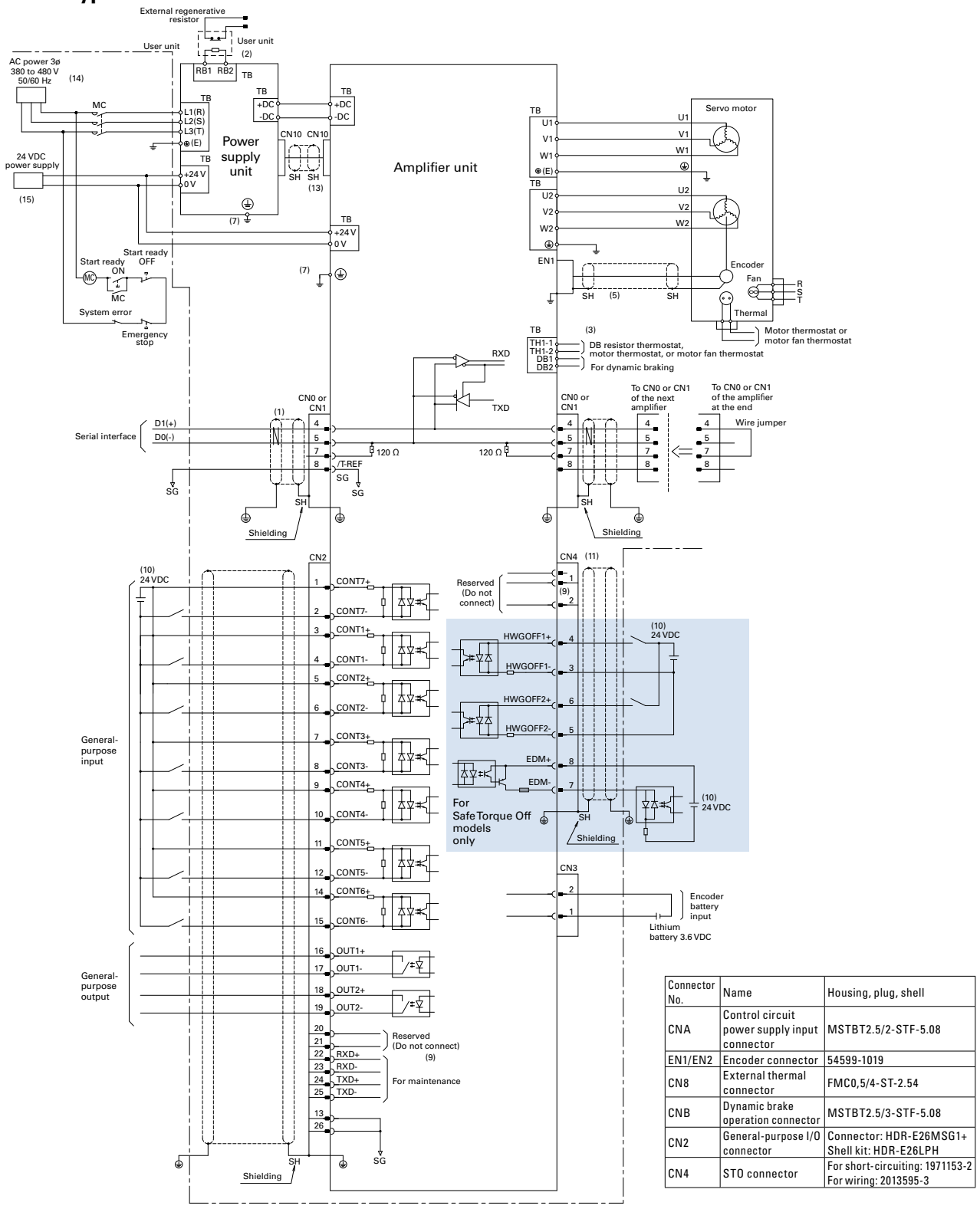

Connector No.	Name	Housing, plug, shell
CNA	Control circuit power supply input connector	MSTBT2.5/2-STF-5.08
EN1/EN2	Encoder connector	54599-1019
CN8	External thermal connector	FMC0,5/4-ST-2.54
CNB	Dynamic brake operation connector	MSTBT2.5/3-STF-5.08
CN2	General-purpose I/O connector	Connector: HDR-E26MSG1+ Shell kit: HDR-E26LPH
CN4	STO connector	For short-circuiting: 1971153-2 For wiring: 2013595-3

(1) [ ] The part indicated by the figure on the left should be wired with shielded twisted pair (STP) cables.

(2) An external regenerative resistor should be connected between the RB1 and RB2 terminals.

(3) If monitoring thermostats by yourself, ensure that these terminals are short-circuited.

(4) Motor side connections vary depending on motor specifications. Perform connections according to the specifications.

(5) Refer to the encoder connection diagram for the wiring of encoder connectors.

(6) R, S, T, r, t, P, N, RB1, RB2, U, V, and W are high-voltage circuits. All other signal lines are low-voltage circuits. When wiring, provide sufficient clearance between high-voltage and low-voltage circuits.

(7) Ground with a wire of 5.5 mm² or larger size.

(8) DB1 and DB2 are dynamic braking timing outputs. Necessary items, an electromagnetic contactor, resistor, power supply, and cables, are to be prepared by the customer. For the electromagnetic contactor, prepare one that works with DC power. Relay contact rating: 30 VDC, 2 A (cosø = 0.4, L/R = 7 ms)

(9) Do not connect anything to the CN4-1, CN4-2, CN2-20, or CN2-21 pins.

(10) An external power supply is to be prepared by the customer.

(11) CN4 is a connector for the Safe Torque Off function. Turning Servo ON (motor in operation) requires to connect a safety device to CN4 and get STO enabled. When not using STO, be sure to insert the short-circuiting STO connector (Mfr. part no.: 1971153-2) to CN4.

(12) Consult us when conducting a withstand voltage test.

(13) For the wiring of unit-to-unit cables, refer to the wiring diagram in the Instruction Manual (M0012312).

(14) Use of a UL or IEC/EN compliant leakage circuit breaker is recommended.

(15) For a 24 VDC power supply, use a SELV (safety extra low voltage) power supply with reinforced insulation on I/O terminals.

Functional Safety Model

Broadly compatible with functional safety, enabling easy integration of safety functions in a device.

Functional safety defined in IEC/EN 61800-5-2:2016: STO (Safe Torque Off), SS1 (Safe Stop 1), SS2 (Safe Stop 2), SOS (Safe Operating Stop), SLS (Safely-Limited Speed), SBC (Safe Brake Control), and SSM (Safe Speed Monitor).

■ Application Examples

Combination with safety components or controllers may be needed for some applications.

Industrial robots

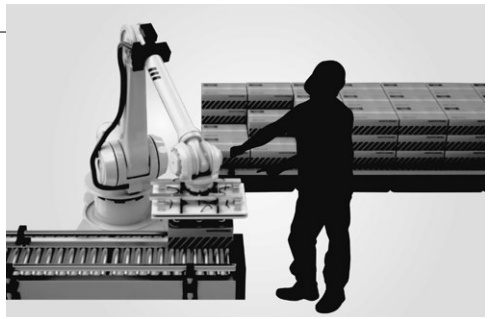

- By setting a stop area around a robot, the SS1 function can slow down and stop the robot (once stopped the motor power is shut off) when a worker enters the area.
- By setting a speed limit area, the SLS function can limit the robot's operation speed at a safe level while a worker is within the area.

Conveyor line



- The STO function can shut off the power of motors without shutting off the conveyor power, enabling workers to safely perform maintenance and other works. Furthermore, the conveyor operation can be resumed right away for improved work efficiency.
- The SLS function can limit the machine operation speed at safe levels, enabling workers to do inspection and setup works without shutting off the conveyor operation.

Common Specifications

For amplifier specifications such as overall performance and detailed information on built-in functions and general-purpose outputs, see the respective pages of the analog/pulse, EtherCAT, and built-in positioning types.

■ Safety standards

Safety standards		
North American safety standards (UL)		UL 61800-5-1
European Directive	Low Voltage Directive	IEC/EN 61800-5-1
	EMC Directive	IEC/EN 61800-3 IEC/EN 61326-1 IEC/EN 61000-6-4 IEC/EN 61000-6-2 IEC 61000-6-7
KC Mark (Korea Certification Mark)		KN 61000-6-2, KN 61000-6-4

■ Functional safety specifications

IEC/EN 61800-5-2:2016	Details	Safety level	
		EN 61508, IEC/EN 62061	ISO 13849-1:2015 EN ISO 13849-1:2015
STO	Safe Torque Off	SIL3, SILCL3	Cat.3 PL e
SS1	Safe Stop 1		
SS2	Safe Stop 2		
SOS	Safe Operating Stop		
SLS	Safely-Limited Speed		
SBC	Safe Brake Control		
SSM	Safe Speed Monitor		

System Configuration

For missing servo amplifier parts, see the respective pages of the analog/pulse, EtherCAT, and built-in positioning types.

25 to 800 A The photo shows a 100 A model.

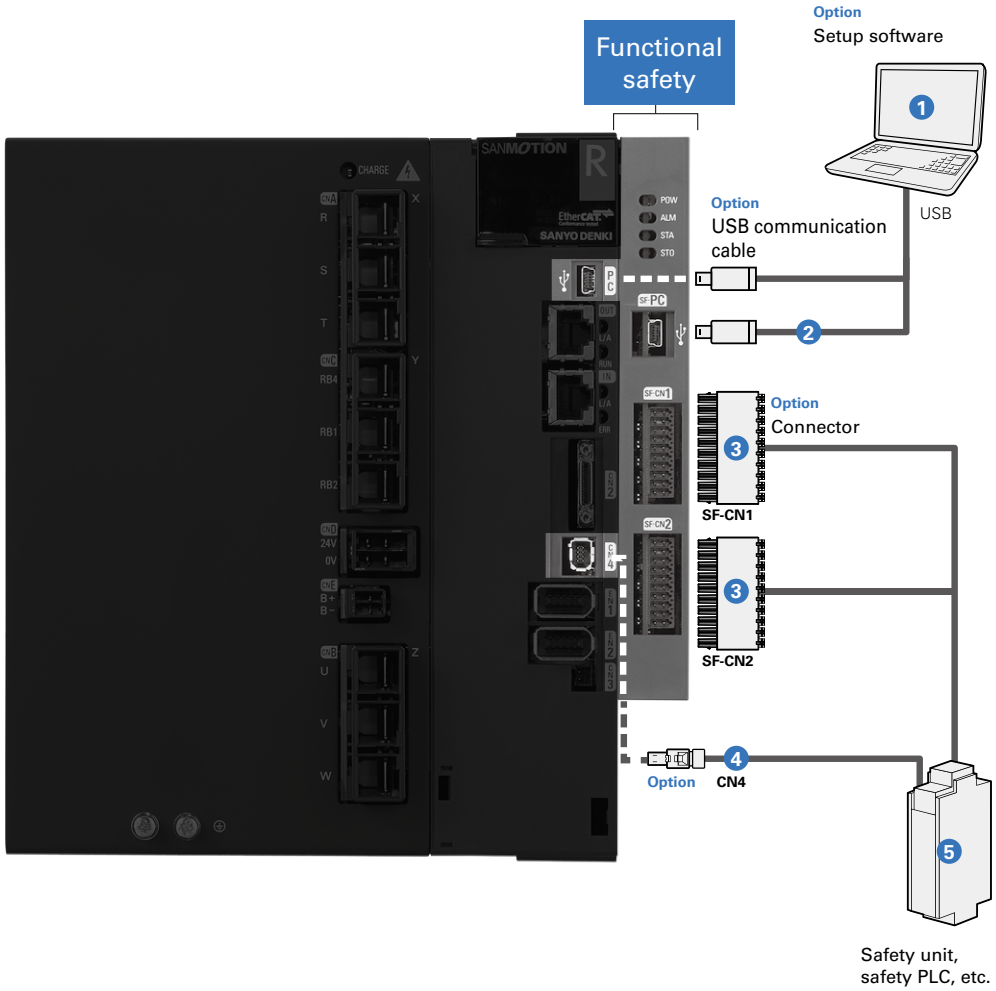

Options and Peripheral Items (25 to 800 A)

No.	Name	Model no.	Description	Page
1	Setup software	Can be downloaded from Product Information on our website.	Parameters can be set and monitored via communication with a PC.	p. 100
2	USB cable	AL-00896515-0□	PC cable for setup software	p. 113
3	SF-CN1 connector SF-CN2 connector	AL-Y0012189-01	For safety device connection Note that this is not a set of two connectors, but a single connector.	pp. 102 to 109
4	CN4 connector	AL-00849548-02 (for short-circuiting), AL-00718252-01 (for wiring)	For safety device connection (for short-circuiting and wiring)	pp. 102 to 109
5	Safety unit, safety PLC, etc.	To be provided by the customer	Connects input and output signals of safety functions to safety units and safety PLCs.	—

Dimensions (Unit: mm)

Shown below are the dimensional drawings of analog/pulse type servo amplifiers combined with a functional safety module.Combinations with EtherCAT or built-in positioning type amplifiers have different connectors from the analog/pulse, but are identical in dimensions.

25 A

Mass: 2.6 kg

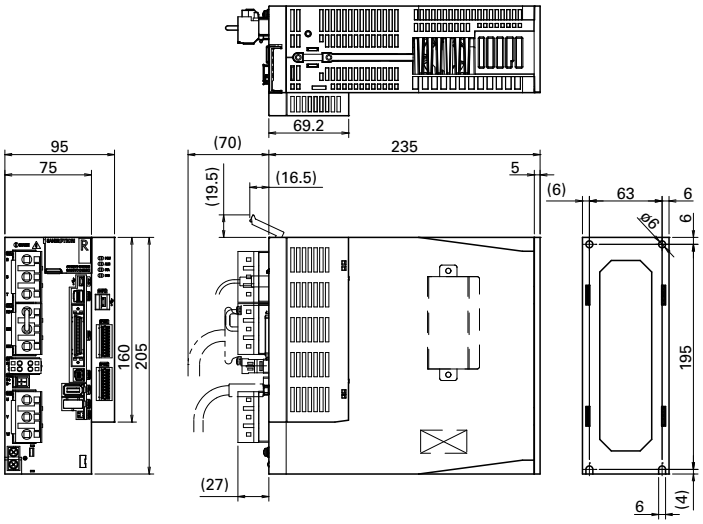

50 A

Mass: 4.8 kg

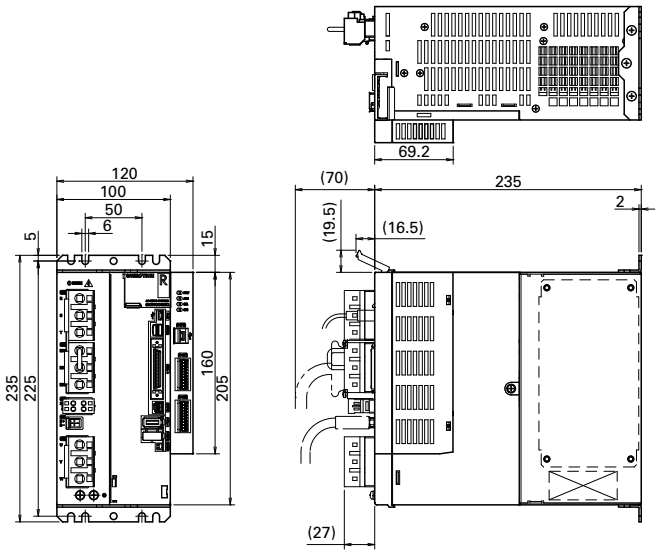

100 A

Mass: 8.6 kg

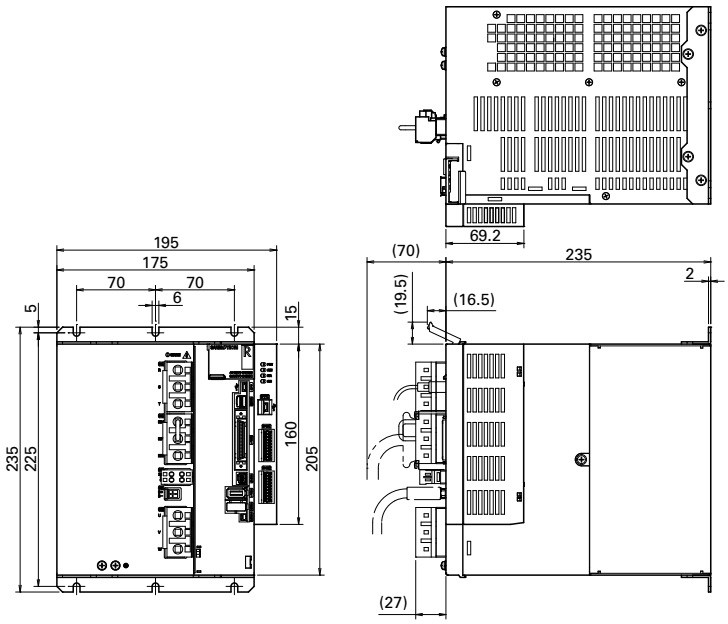

Note: Drawings for 150 to 800 A amplifiers are omitted because they are identical to the analog/pulse and EtherCAT types.

External Wiring Diagram Functional Safety Model

For diagrams of the amplifier portion, see the respective pages of analog/pulse, EtherCAT, and built-in positioning types.

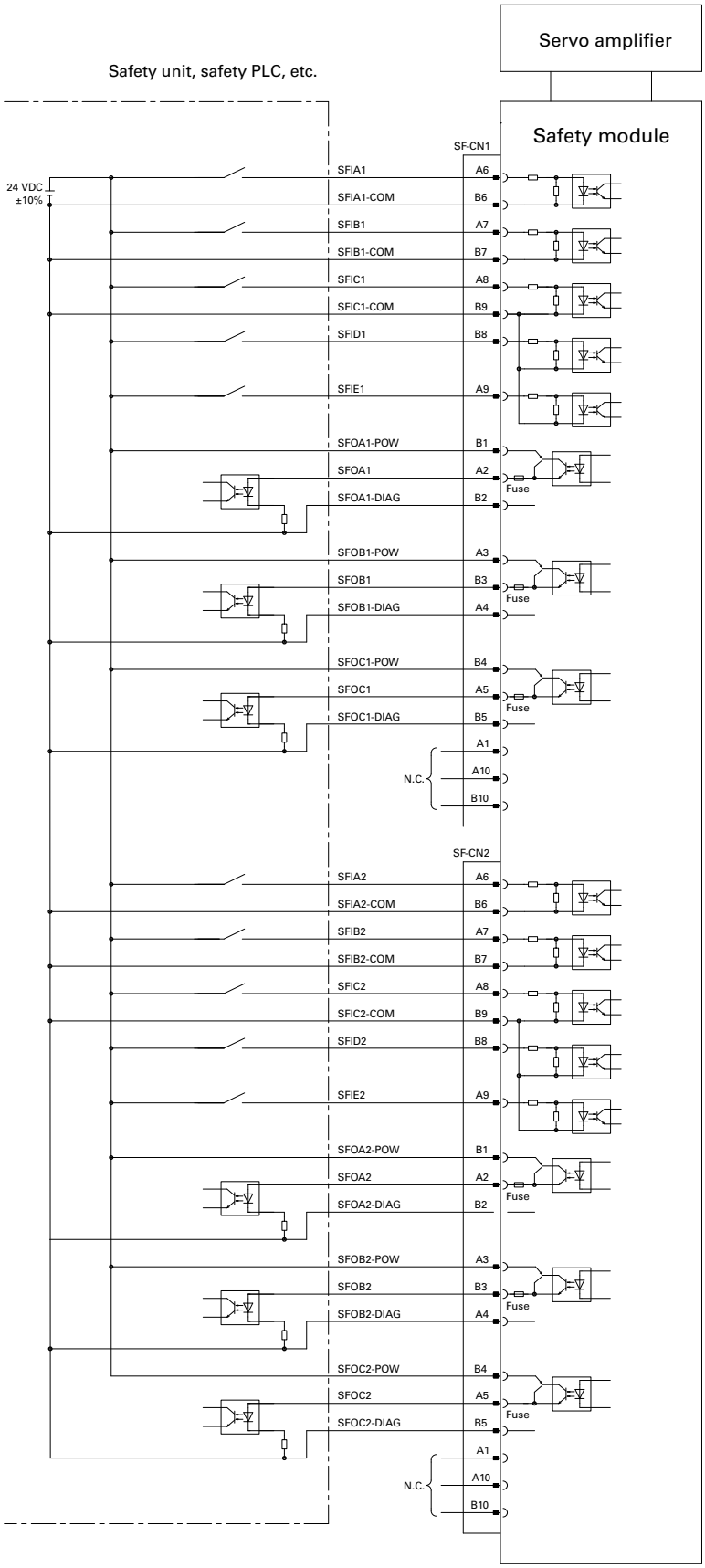

Encoder Wiring Diagram (Common to analog/pulse, EtherCAT, built-in positioning function, and Functional Safety models)

Absolute encoders

Battery-less absolute encoder
Single-turn absolute encoder
Option: Battery-backup absolute encoder

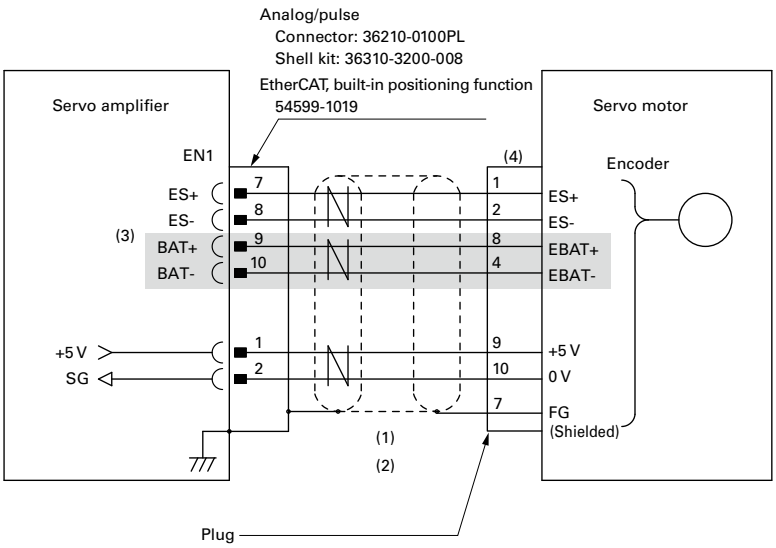

Plug model no.		
Compatible motors: Other than R2CA2830KV, R2CA3255KB		Compatible motors: R2CA2830KV R2CA3255KB
Straight	Angled	
JN2DS10SL1-R	JN2FS10SL1-R	AL-00082504-15 (Mfr. part no.: 5557-10R)
JN2DS10SL2-R	JN2FS10SL2-R	
JN2DS10SL3-R	JN2FS10SL3-R	

(1) Use shielded twisted pair cables.
(2) Conductor size of power lines (5 V and SG) and corresponding cable length (max.):

Conductor size		Conductor resistance [Ω /km] at 20°C	Length [m]
AWG	26	150 or less	5
	24	100 or less	10
	22	60 or less	15
	20	40 or less	25
	18	25 or less	40
SQ (mm^2)	0.15	150 or less	5
	0.2	100 or less	10
	0.3	65 or less	15
	0.5	40 or less	25
	0.75	28 or less	35

The conductor resistance varies depending on the conductor specifications.

(3) Battery lines (EBAT+ and EBAT-) are required only when a battery-backup absolute encoder is used.
(4) The plug pin assignment is as follows.

Compatible motors	ES+	ES-	EBAT+	EBAT-	+5 V	0 V	FG
Other than R2CA2830KV, R2CA3255KB	1	2	8	4	9	10	7
R2CA2830KV R2CA3255KB	1	2	5	9	7	8	10

Option: Incremental encoder

Wire-saving incremental encoder

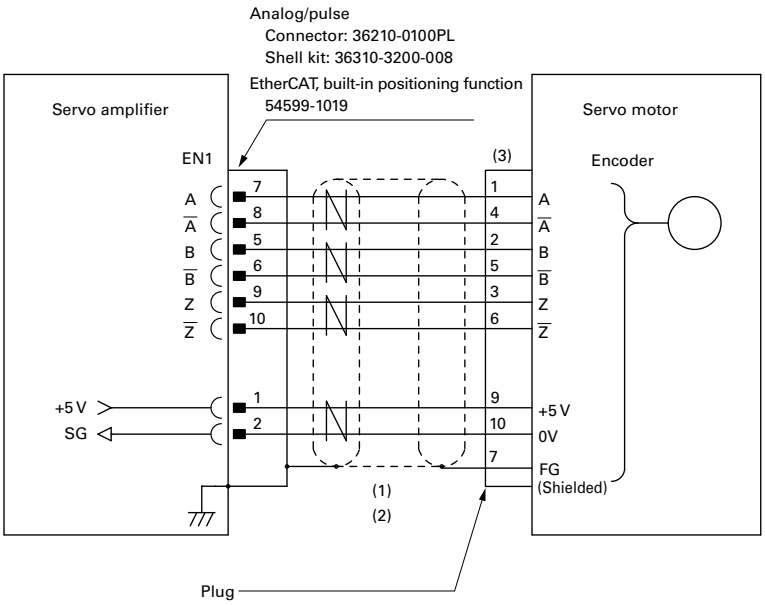

Plug model no.		
Compatible motors: Other than R2CA2830KV, R2CA3255KB		Compatible motors: R2CA2830KV R2CA3255KB
Straight	Angled	
JN2DS10SL1-R	JN2FS10SL1-R	AL-00082504-15 (Mfr. part no.: 5557-10R)
JN2DS10SL2-R	JN2FS10SL2-R	
JN2DS10SL3-R	JN2FS10SL3-R	

(1) Use shielded twisted pair cables.
(2) Conductor size of power lines (5 V and SG) and corresponding cable length (max.):

Conductor size		Conductor resistance [Ω /km] at 20°C	Length [m]
AWG	26	150 or less	5
	24	100 or less	10
	22	60 or less	15
	20	40 or less	25
	18	25 or less	40
SQ (mm^2)	0.15	150 or less	5
	0.2	100 or less	10
	0.3	65 or less	15
	0.5	40 or less	25
	0.75	28 or less	35

The conductor resistance varies depending on the conductor specifications.

(3) The plug pin assignment is as follows.

Compatible motors	A	$\overline{A}$	B	$\overline{B}$	Z	$\overline{Z}$	+5 V
Other than R2CA2830KV, R2CA3255KB	1	4	2	5	3	6	9
R2CA2830KV R2CA3255KB	1	2	3	4	5	6	7

Compatible motors	0 V	FG
Other than R2CA2830KV, R2CA3255KB	10	7
R2CA2830KV R2CA3255KB	8	10

Servo Motor

R2 and R1
Rotary Motors

Output capacity: 550 W to 55 kW

These are rotary servo motors with a wide range of product lineup.



■ How to Read Model Numbers

Note that not all the possible combinations of the numbers and characters below are valid.
Also, some of the numbers/characters listed below are for optional models.
For model numbers valid as standard products, refer to "Standard Model Number List".

R 2 C A 10 075 F C R 03 M

Additional specification identifier

Code	Specification
M	CE/UKCA/UL certified

Specification identifier

Code	Specification
00	Standard (Not R2CA10□)
03	Standard (R2CA10□)

Encoder type (Absolute encoder)

Code	Specification
R	Battery-less absolute encoder
H	Single-turn absolute encoder

For encoder details, see p. 12.

Holding brake

Code	Specification
X	No brake
C	24 VDC brake

Max. rotation speed

For the numeric values, see the specification table.

Rated output

Code	Specification	Code	Specification
050	550 W	450	4.5 kW
075	750 W	550	5.5 kW
100	1.0 kW	750	7.5 kW
120	1.2 kW	11K	11 kW
150	1.5 kW	15K	15 kW
180	1.8 kW	20K	20, 21 kW
200	2.0 kW	30K	30 kW
300	3.0 kW	55K	55 kW
350	3.5 kW		

Flange size

Code	Specification
10	100 mm sq.
13	130 mm sq.
18	180 mm sq.
22	220 mm sq.
28	275 mm sq.
32	320 mm sq.

Motor shape identifier

Code	Specification
A	Standard

Power supply voltage

Code	Specification
C	400 VAC

Motor type

Code	Specification
2	Medium inertia
1	Low inertia

R ... R series

Specifications

R2 Servo Motors

Medium Inertia and Low Ripple RoHS

Input voltage 400 VAC

Flange size				130 mm sq.	100 mm sq.		130 mm sq.
Servo motor model no.				R2CA13050D	R2CA10075F	R2CA10100F	R2CA13120R
Compatible servo amplifier model no.				RS3C02□□ 25 A		RS3C05 □□ 50 A	RS3C02 □□ 25 A
	Notes	Symbol	Unit				
Rated output	★	P_R	kW	0.55	0.75	1.0	1.2
Rated speed	★	N_R	min^{-1}	2000	3000	3000	2000
Maximum speed	★	N_{max}	min^{-1}	5000	6000	6000	3000
Rated torque	★	T_R	N·m	2.6	2.39	3.18	5.7
Continuous torque at stall	★	T_S	N·m	3.0	2.55	3.92	6.0
Peak torque at stall	★	T_P	N·m	9.0	8.6	14.3	20.0
Rated armature current	★	I_R	Arms	3.2	3.1	5.7	3.6
Continuous armature current at stall	★	I_S	Arms	3.5	3.2	6.8	3.7
Peak armature current at stall	★	I_P	Arms	12.0	11.3	25.7	12.9
Torque constant	☆	K_T	N·m/Arms	0.92	0.868	0.584	1.69
Voltage constant per phase	☆	$K_{E\phi}$	mV/min^{-1}	32.2	30.3	20.4	59.1
Phase resistance	☆	R_ϕ	Ω	1.17	1.55	0.35	1.5
Rated power rate	★	Q_R	kW/s	22	23	25.9	54
Rotor inertia		J_M	$\times 10^{-4}$kg·m² ($GD^2/4$)	3.1	2.5	3.9	6.0
Encoder inertia[1]		J_S	$\times 10^{-4}$kg·m² ($GD^2/4$)	0.0042			
Motor mass[1]		W_e	kg	4.5 (6)	3.9 (4.8)	4.7 (5.8)	6.1 (8)
Brake static friction torque		Tb	N·m	3.5 min.	3.92 min.	3.92 min.	9.0 min.
Brake rated voltage		Vb	V	90/24 VDC ± 10%			
Brake current consumption		Ib	A	0.15/0.41	0.09/0.30		0.17/0.51
Brake inertia		Jb	$\times 10^{-4}$kg·m² ($GD^2/4$)	0.5	0.343		0.5
Amplifier power supply capacity (rated)			kVA	1.0	1.3	1.8	2.0
CE/UKCA/UL certified motor				✓			
Motor protection rating				IP65			
Size of heat dissipation aluminum plate				305 × 305 × 20 mm	305 × 305 × 12 mm		400 × 400 × 20 mm
Page of dimensional drawing				p. 92			

★ Values are typical values when combined with a standard servo amplifier after thermal equilibrium is established.
☆ Values are typical values when the winding temperature is 20°C.

(1) The encoder inertia and servo motor mass values are when equipped with a battery-less absolute encoder.
Contact us for information on other encoders.
Inside ( ) are the values with brake.

■ Speed-Torque Characteristics

These are for when an input voltage of 400 VAC is used. The instantaneous zone characteristics will drop if the input voltage is below 400 VAC .

Servo Motor Model no.			
R2CA13050D (2)	R2CA10075F	R2CA10100F	R2CA13120R

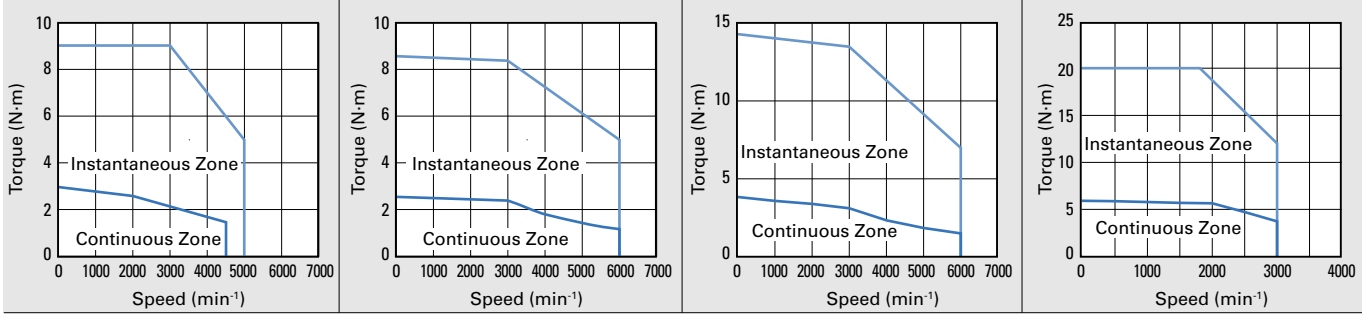

(2) Operate a motor so that the average speed does not exceed its maximum speed in the continuous zone.

130 mm sq.			Flange size			
R2CA13120F	**R2CA13180H**	**R2CA13180D**	Servo motor model no.			
RS3C05 □□	**RS3C02 □□**	**RS3C05 □□**	Compatible servo amplifier model no.			
50 A	25 A	50 A	Unit	Symbol	Notes	
1.2	1.8	1.8	kW	P_R	★	Rated output
2000	2000	2000	min^{-1}	N_R	★	Rated speed
5000	3500	5000	min^{-1}	N_{max}	★	Maximum speed
5.7	8.6	8.6	N·m	T_R	★	Rated torque
6.0	9.2	10.0	N·m	T_S	★	Continuous torque at stall
20.0	24.0	25.0	N·m	T_P	★	Peak torque at stall
7.5	4.8	10.2	Arms	I_R	★	Rated armature current
7.8	4.8	11.0	Arms	I_S	★	Continuous armature current at stall
27.7	12.9	29.2	Arms	I_P	★	Peak armature current at stall
0.79	2.10	0.94	N·m/Arms	K_T	☆	Torque constant
27.7	73.2	32.8	mV/min^{-1}	$K_{E\phi}$	☆	Voltage constant per phase
0.34	1.35	0.27	Ω	R_ϕ	☆	Phase resistance
54	82	82	kW/s	Q_R	★	Rated power rate
6.0	9.0	9.0	$\times 10^{-4}$kg·m² (GD²/4)	J_M		Rotor inertia
0.0042			$\times 10^{-4}$kg·m² (GD²/4)	J_S		Encoder inertia(1)
6.1 (8)	8 (9.2)	8 (9.2)	kg	W_e		Motor mass(1)
9.0 min.	9.0 min.	9.0 min.	N·m	Tb		Brake static friction torque
90/24 VDC ± 10%			V	Vb		Brake rated voltage
0.17/0.51	0.17/0.51	0.17/0.51	A	Ib		Brake current consumption
0.5	0.5	0.5	$\times 10^{-4}$kg·m² (GD²/4)	Jb		Brake inertia
2.3	2.9	3.3	kVA			Amplifier power supply capacity (rated)
✓						CE/UKCA/UL certified motor
IP65						Motor protection rating
400 × 400 × 20 mm	470 × 470 × 20 mm					Size of heat dissipation aluminum plate
p. 92						Page of dimensional drawing

Servo motor ambient operating conditions

Operating temperature & humidity	Ambient temperature: 0 to 40°C, relative humidity: 20 to 90% or less (non-condensing)
Vibration resistance	24.5 m/s^2
Shock resistance	98 m/s^2, 2 times
Operating altitude	1,000 m or lower above sea level
Installation location	Indoors (not exposed to direct sunlight) A location free of corrosive gases, flammable gases, powder dust, and other substances that are detrimental to the used machines and motors.

Servo Motor Model no.

R2CA13120F (2)

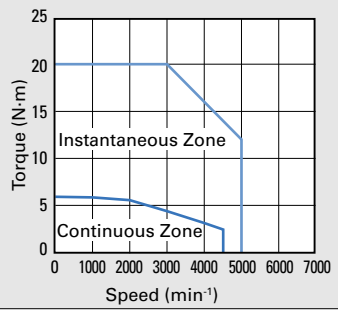

R2CA13180H

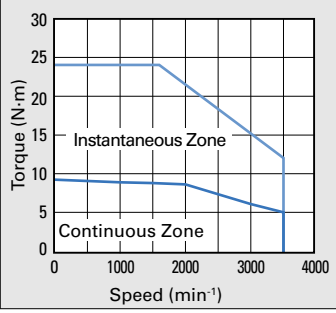

R2CA13180D (2)

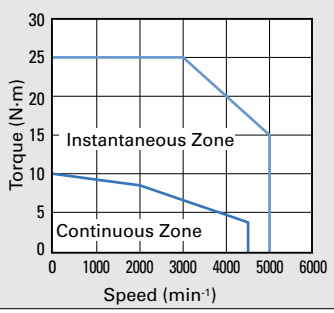

Specifications

R2 Servo Motors Medium Inertia and Low Ripple RoHS

Input voltage 400 VAC

Flange size				130 mm sq.		180 mm sq.
Servo motor model no.				R2CA13200L	R2CA13200H	R2CA18350L
Compatible servo amplifier model no.				RS3C02 □□ 25 A	RS3C05 □□ 50 A	
	Notes	Symbol	Unit			
Rated output	★	P_R	kW	2.0	2.0	3.5
Rated speed	★	N_R	min^{-1}	2000	2000	2000
Maximum speed	★	N_{max}	min^{-1}	3000	5000	3000
Rated torque	★	T_R	N·m	9.5	9.5	17.0
Continuous torque at stall	★	T_S	N·m	12.0	12.0	22.0
Peak torque at stall	★	T_P	N·m	30.0	30.0	49.0
Rated armature current	★	I_R	Arms	4.6	8.0	9.6
Continuous armature current at stall	★	I_S	Arms	4.6	9.6	12.0
Peak armature current at stall	★	I_P	Arms	12.0	26.5	29.2
Torque constant	☆	K_T	N·m/Arms	2.83	1.34	1.96
Voltage constant per phase	☆	$K_{E\phi}$	mV/min^{-1}	98.7	46.8	68.4
Phase resistance	☆	R_ϕ	Ω	1.70	0.44	0.35
Rated power rate	★	Q_R	kW/s	74	74	72
Rotor inertia		J_M	$\times 10^{-4}$kg·m² ($GD^2/4$)	12.2	12.2	40
Encoder inertia(1)		J_S	$\times 10^{-4}$kg·m² ($GD^2/4$)	0.012		
Motor mass(1)		W_e	kg	10 (12)	10 (12)	15.5 (20)
Brake static friction torque		Tb	N·m	12 min.	12 min.	22 min.
Brake rated voltage		Vb	V	90/24 VDC ± 10%		
Brake current consumption		Ib	A	0.17/0.66	0.17/0.66	0.32/1.2
Brake inertia		Jb	$\times 10^{-4}$kg·m² ($GD^2/4$)	0.5	0.5	5.1
Amplifier power supply capacity (rated)			kVA	3.3	3.7	6.0
CE/UKCA/UL certified motor				✓		
Motor protection rating				IP65		
Size of heat dissipation aluminum plate				470 × 470 × 20 mm		
Page of dimensional drawing				p. 93		

★ Values are typical values when combined with a standard servo amplifier after thermal equilibrium is established.
☆ Values are typical values when the winding temperature is 20°C.

(1) The encoder inertia and servo motor mass values are when equipped with a battery-less absolute encoder.
Contact us for information on other encoders.
Inside ( ) are the values with brake.

■ Speed-Torque Characteristics

These are for when an input voltage of 400 VAC is used. The instantaneous zone characteristics will drop if the input voltage is below 400 VAC.

Servo Motor Model no.

R2CA13200L

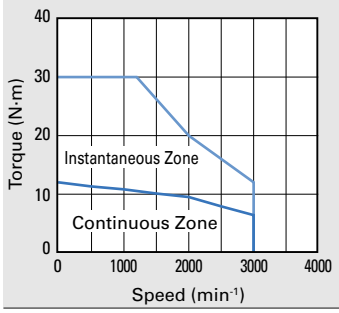

R2CA13200H (2)

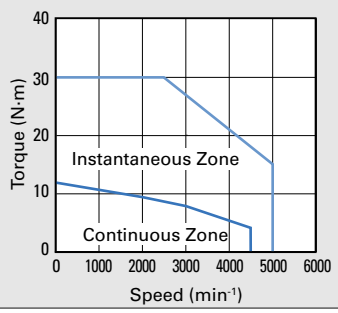

R2CA18350L

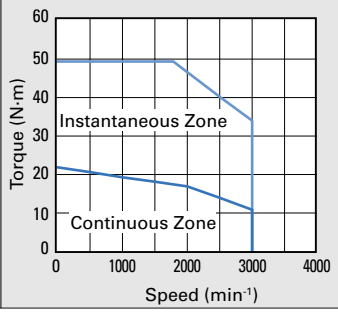

(2) Operate a motor so that the average speed does not exceed its maximum speed in the continuous zone.

180 mm sq.			Flange size			
R2CA18350D	**R2CA18450H**	**R2CA18550R**	Servo motor model no.			
RS3C10 □□ 100 A			Compatible servo amplifier model no.			
			Unit	Symbol	Notes	
3.5	4.5	5.5	kW	P_R	★	Rated output
2000	2000	1500	min^{-1}	N_R	★	Rated speed
4000	3500	3000	min^{-1}	N_{max}	★	Maximum speed
17.0	21.5	35.0	N·m	T_R	★	Rated torque
22.0	30.0	37.3	N·m	T_S	★	Continuous torque at stall
60.0	75.0	90.0	N·m	T_P	★	Peak torque at stall
14.8	12.8	18.3	Arms	I_R	★	Rated armature current
18.2	17.0	19.5	Arms	I_S	★	Continuous armature current at stall
52.8	48	52.8	Arms	I_P	★	Peak armature current at stall
1.42	1.89	2.15	N·m/Arms	K_T	☆	Torque constant
49.7	65.8	74.9	mV/min^{-1}	$K_{E\phi}$	☆	Voltage constant per phase
0.17	0.23	0.19	Ω	R_ϕ	☆	Phase resistance
72	92	180	kW/s	Q_R	★	Rated power rate
40	50	68	$\times 10^{-4}$kg·m² ($GD^2/4$)	J_M		Rotor inertia
0.012			$\times 10^{-4}$kg·m² ($GD^2/4$)	J_S		Encoder inertia[1]
15.5 (20)	20 (24)	26 (31)	kg	W_e		Motor mass[1]
22 min.	32 min.	42 min.	N·m	Tb		Brake static friction torque
90/24 VDC ± 10%			V	Vb		Brake rated voltage
0.32/1.2	0.27/1.0	0.27/1.0	A	Ib		Brake current consumption
5.1	5.1	5.1	$\times 10^{-4}$kg·m² ($GD^2/4$)	Jb		Brake inertia
6.0	7.6	9.5	kVA			Amplifier power supply capacity (rated)
✓						CE/UKCA/UL certified motor
IP65						Motor protection rating
470 × 470 × 20 mm		540 × 540 × 20 mm				Size of heat dissipation aluminum plate
p. 93						Page of dimensional drawing

Servo motor ambient operating conditions

Operating temperature & humidity	Ambient temperature: 0 to 40°C, relative humidity: 20 to 90% or less (non-condensing)
Vibration resistance	24.5 m/s^2
Shock resistance	98 m/s^2, 2 times
Operating altitude	1,000 m or lower above sea level
Installation location	Indoors (not exposed to direct sunlight) A location free of corrosive gases, flammable gases, powder dust, and other substances that are detrimental to the used machines and motors.

Servo Motor Model no.

R2CA18350D [2]

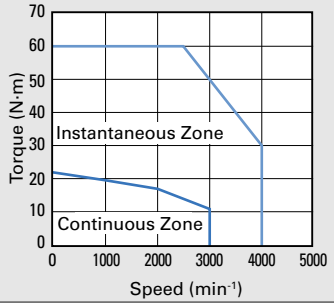

R2CA18450H [2]

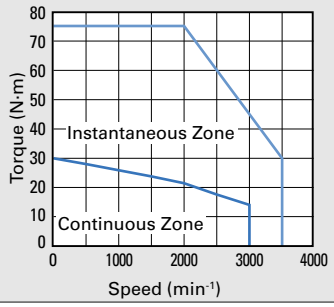

R2CA18550R

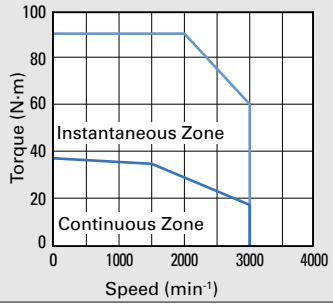

Specifications

R2 Servo Motors Medium Inertia and Low Ripple RoHS

Input voltage 400 VAC

Flange size				180 mm sq.		220 mm sq.
Servo motor model no.				R2CA18550H	R2CA18750H	R2CA2211KB
Compatible servo amplifier model no.				RS3C15 □□ 150 A		
	Notes	Symbol	Unit			
Rated output	★	P_R	kW	5.5	7.5	11
Rated speed	★	N_R	min^{-1}	1500	1500	1500
Maximum speed	★	N_{max}	min^{-1}	3000	3000	2500
Rated torque	★	T_R	N·m	35	48	70
Continuous torque at stall	★	T_S	N·m	37.5	54.9	80
Peak torque at stall	★	T_P	N·m	107	140	176
Rated armature current	★	I_R	Arms	23.6	27.5	32
Continuous armature current at stall	★	I_S	Arms	24.7	30.6	34
Peak armature current at stall	★	I_P	Arms	77.5	83	83
Torque constant	☆	K_T	N·m/Arms	1.67	1.97	2.63
Voltage constant per phase	☆	$K_{E\phi}$	mV/min^{-1}	58.4	68.8	91.7
Phase resistance	☆	R_ϕ	Ω	0.125	0.115	0.078
Rated power rate	★	Q_R	kW/s	180	235	275
Rotor inertia		J_M	$\times 10^{-4}$kg·m² (GD²/4)	68	98	178
Encoder inertia[1]		J_S	$\times 10^{-4}$kg·m² (GD²/4)	0.012		
Motor mass[1]		W_e	kg	26 (31)	34 (38)	55 (65)
Brake static friction torque		Tb	N·m	42 min.	54.9 min.	90 min.
Brake rated voltage		Vb	V	90/24 VDC ± 10%		
Brake current consumption		Ib	A	0.27/1.0	0.37/1.4	0.44/1.7
Brake inertia		Jb	$\times 10^{-4}$kg·m² (GD²/4)	5.1	4.5	24
Amplifier power supply capacity (rated)			kVA	7.0	9.4	13.6
Cooling fan power consumption		P_F	W	–	–	–
CE/UKCA/UL certified motor				✓		
Motor protection rating				IP65		
Size of heat dissipation aluminum plate				540 × 540 × 20 mm		610 × 610 × 30 mm
Page of dimensional drawing				p. 93	p. 94	

★ Values are typical values when combined with a standard servo amplifier after thermal equilibrium is established.
☆ Values are typical values when the winding temperature is 20°C.

(1) The encoder inertia and servo motor mass values are when equipped with a battery-less absolute encoder.
Contact us for information on other encoders.
Inside ( ) are the values with brake.

■ Speed-Torque Characteristics

These are for when an input voltage of 400 VAC is used. The instantaneous zone characteristics will drop if the input voltage is below 400 VAC.

Servo Motor Model no.

R2CA18550H

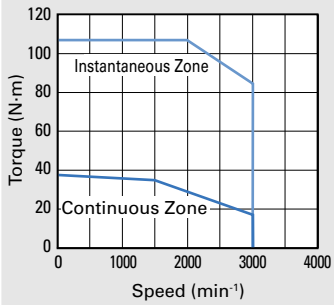

R2CA18750H

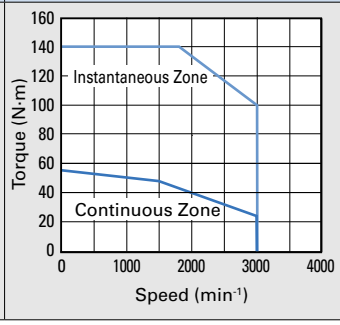

R2CA2211KB (2)

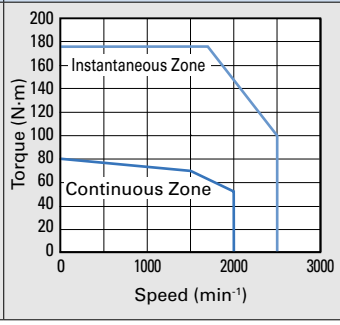

(2) Operate a motor so that the average speed does not exceed its maximum speed in the continuous zone.

220 mm sq.		275 mm sq.	320 mm sq.	Flange size			
R2CA2215KV	**R2CA2220KV**	**R2CA2830KV**	**R2CA3255KB**	Servo motor model no.			
RS3C15 □□ 150 A	**RS3C30** □□ 300 A		**RS3D80** □□ 800 A	Compatible servo amplifier model no.			
				Unit	Symbol	Notes	
15	20	30	55	kW	P_R	★	Rated output
1500	1500	1500	1500	min^{-1}	N_R	★	Rated speed
2000	2300	2000	2000	min^{-1}	N_{max}	★	Maximum speed
95	125	191.1	350	N·m	T_R	★	Rated torque
95	125	191.1	385	N·m	T_S	★	Continuous torque at stall
215	280	480	980	N·m	T_P	★	Peak torque at stall
34	63.8	61.9	110 <55>(3)	Arms	I_R	★	Rated armature current
34	61.2	55.8	118 <59>(3)	Arms	I_S	★	Continuous armature current at stall
83	155	155	330 <165>(3)	Arms	I_P	★	Peak armature current at stall
3.1	2.28	3.8	3.3	N·m/Arms	K_T	☆	Torque constant
108.1	79.5	132.7	105	mV/min^{-1}	$K_{E\phi}$	☆	Voltage constant per phase
0.065	0.037	0.057	0.022 <0.044>(3)	Ω	R_ϕ	☆	Phase resistance
313	543	865	692	kW/s	Q_R	★	Rated power rate
288	288	422	1440	×10^{-4}kg·m^2 (GD^2/4)	J_M		Rotor inertia
0.012				×10^{-4}kg·m^2 (GD^2/4)	J_S		Encoder inertia(1)
74 (91)	90 (100)	110 (127)	245	kg	W_e		Motor mass(1)
170 min.		191.2 min.	—	N·m	Tb		Brake static friction torque
24 VDC ± 10%			—	V	Vb		Brake rated voltage
1.5	1.5	2.6	—	A	Ib		Brake current consumption
12	12	11.8	—	×10^{-4}kg·m^2 (GD^2/4)	Jb		Brake inertia
18.4	27.5	36.2	90	kVA			Amplifier power supply capacity (rated)
–	65/65 180 to 253 VAC 3-phase 50/60 Hz		150/195 180 to 220 VAC 3-phase 50/60 Hz	W	P_F		Cooling fan power consumption
✓			—				CE/UKCA/UL certified motor
IP65	IP65 (excluding the cooling fan and terminal box)		IP55 (excluding the cooling fan and terminal box)				Motor protection rating
610 × 610 × 30 mm			690 × 690 × 40 mm				Size of heat dissipation aluminum plate
p. 94	p. 95		p. 96				Page of dimensional drawing

(3) Inside < > are the values for a single-axis system.

Servo motor ambient operating conditions

Operating temperature & humidity	Ambient temperature: 0 to 40°C, relative humidity: 20 to 90% or less (non-condensing)
Vibration resistance	24.5 m/s^2
Shock resistance	98 m/s^2, 2 times
Operating altitude	1,000 m or lower above sea level
Installation location	Indoors (not exposed to direct sunlight) A location free of corrosive gases, flammable gases, powder dust, and other substances that are detrimental to the used machines and motors.

Servo Motor Model no.

R2CA2215KV

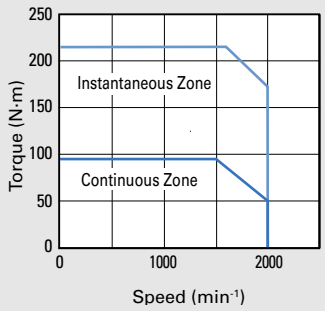

R2CA2220KV

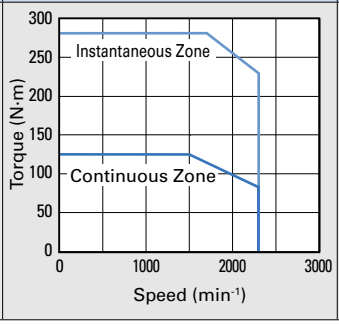

R2CA2830KV

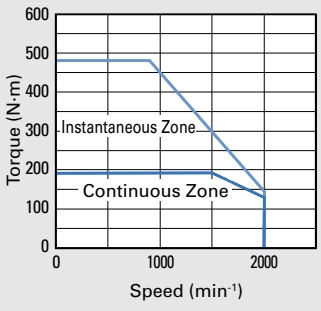

R2CA3255KB

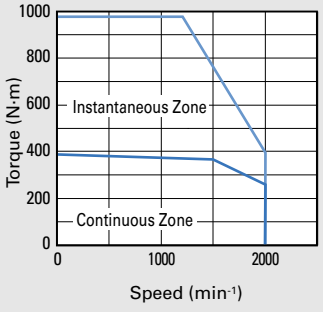

Specifications

R1 Servo Motors Low Inertia, High Power Rate RoHS

Input voltage 400 VAC

Flange size				100 mm sq.	
Servo motor model no.				R1CA10150V	R1CA10200V
Compatible servo amplifier model no.				RS3C02 □□ 25 A	RS3C05 □□ 50 A
	Notes	Symbol	Unit		
Rated output	★	P_R	kW	1.5	2.0
Rated speed	★	N_R	min^{-1}	3000	3000
Maximum speed	★	N_{max}	min^{-1}	5000	5000
Rated torque	★	T_R	N·m	4.77	6.37
Continuous torque at stall	★	T_S	N·m	4.77	6.37
Peak torque at stall	★	T_P	N·m	14.3	20.0
Rated armature current	★	I_R	Arms	4.5	6.3
Continuous armature current at stall	★	I_S	Arms	4.3	6.1
Peak armature current at stall	★	I_P	Arms	14.1	20.7
Torque constant	☆	K_T	N·m/Arms	1.17	1.15
Voltage constant per phase	☆	$K_{E\phi}$	mV/min^{-1}	40.8	40.1
Phase resistance	☆	R_ϕ	Ω	1.25	0.95
Rated power rate	★	Q_R	kW/s	108	169
Rotor inertia		J_M	$\times 10^{-4}$kg·m² ($GD^2/4$)	2.1	2.4
Encoder inertia(1)		J_S	$\times 10^{-4}$kg·m² ($GD^2/4$)	0.0042	
Motor mass(1)		W_e	kg	5.0 (6.6)	5.7 (7.2)
Brake static friction torque		Tb	N·m	9.3 min.	
Brake rated voltage		Vb	V	24 VDC ± 10%	
Brake current consumption		Ib	A	0.70	
Brake inertia		Jb	$\times 10^{-4}$kg·m² ($GD^2/4$)	0.30	
Amplifier power supply capacity (rated)			kVA	2.5	3.7
Cooling fan power consumption		P_F	W	–	–
CE/UKCA/UL certified motor				✓	
Motor protection rating				IP65	
Size of heat dissipation aluminum plate				400 × 400 × 20 mm	470 × 470 × 20 mm
Page of dimensional drawing				p. 97	

★ Values are typical values when combined with a standard servo amplifier after thermal equilibrium is established.
☆ Values are typical values when the winding temperature is 20°C.

(1) The encoder inertia and servo motor mass values are when equipped with a battery-less absolute encoder.
Contact us for information on other encoders.
Inside ( ) are the values with brake.

■ Speed-Torque Characteristics

These are for when an input voltage of 400 VAC is used. The instantaneous zone characteristics will drop if the input voltage is below 400 VAC.

Servo motor model no.	
R1CA10150V	R1CA10200V



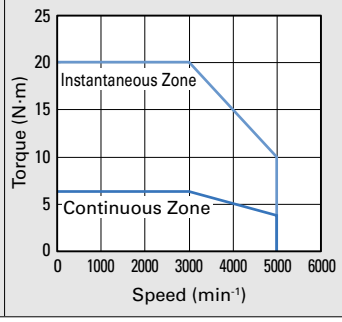

130 mm sq.	180 mm sq.	Flange size			
R1CA13300V	**R1CA18550H**	Servo motor model no.			
RS3C05 □□ 50 A	**RS3C15 □□** 150 A	Compatible servo amplifier model no.			
		Unit	Symbol	Notes	
3.0	5.5	kW	P_R	★	Rated output
3000	1500	min^{-1}	N_R	★	Rated speed
5000	3000	min^{-1}	N_{max}	★	Maximum speed
9.55	35	N·m	T_R	★	Rated torque
9.55	37	N·m	T_S	★	Continuous torque at stall
29.0	110	N·m	T_P	★	Peak torque at stall
8.7	23	Arms	I_R	★	Rated armature current
8.3	23.2	Arms	I_S	★	Continuous armature current at stall
28.0	78	Arms	I_P	★	Peak armature current at stall
1.23	1.75	N·m/Arms	K_T	☆	Torque constant
42.8	61	mV/min^{-1}	$K_{E\phi}$	☆	Voltage constant per phase
0.36	0.125	Ω	R_ϕ	☆	Phase resistance
134	371	kW/s	Q_R	★	Rated power rate
6.8	33	$\times10^{-4}$kg·m² ($GD^2/4$)	J_M		Rotor inertia
0.012		$\times10^{-4}$kg·m² ($GD^2/4$)	J_S		Encoder inertia[(1)]
9.7 (11.8)	33 (38)	kg	W_e		Motor mass[(1)]
12 min.	53.9 min.	N·m	Tb		Brake static friction torque
24 VDC ± 10%	90/24 VDC ± 10%	V	Vb		Brake rated voltage
0.66	0.37/1.4	A	Ib		Brake current consumption
0.50	5.7	$\times10^{-4}$kg·m² ($GD^2/4$)	Jb		Brake inertia
5.2	7.0	kVA			Amplifier power supply capacity (rated)
–	30/26 200 VAC ± 10%, single-phase, 50/60 Hz CE/UL certified: 31/29 180 to 253 VAC, single-phase, 50/60 Hz	W	P_F		Cooling fan power consumption
✓					CE/UKCA/UL certified motor
IP65	IP65 (excluding the cooling fan)				Motor protection rating
470 × 470 × 20 mm	540 × 540 × 20 mm				Size of heat dissipation aluminum plate
p. 97	p. 98				Page of dimensional drawing

Servo motor ambient operating conditions

Operating temperature & humidity	Ambient temperature: 0 to 40°C, relative humidity: 20 to 90% or less (non-condensing)
Vibration resistance	[1 to 3 kW] In operation: 49 m/s^2 or less, at standstill: 24.5 m/s^2 or less [5.5 kW] 24.5 m/s^2 or less
Shock resistance	98 m/s^2, 2 times
Operating altitude	1,000 m or lower above sea level
Installation location	Indoors (not exposed to direct sunlight) A location free of corrosive gases, flammable gases, powder dust, and other substances that are detrimental to the used machines and motors.

Servo motor model no.

R1CA13300V

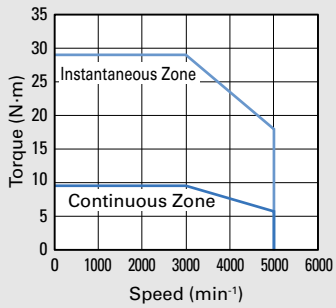

R1CA18550H

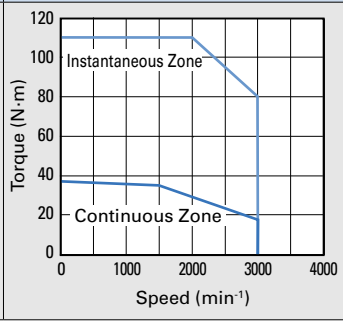

Specifications

R1 Servo Motors Low Inertia, High Power Rate RoHS

Input voltage 400 VAC

Flange size				180 mm sq.	
Servo motor model no.				R1CA18750L	R1CA1811KR
Compatible servo amplifier model no.				RS3C15 □□ 150 A	
	Notes	Symbol	Unit		
Rated output	★	P_R	kW	7.5	11
Rated speed	★	N_R	min^{-1}	1500	1500
Maximum speed	★	N_{max}	min^{-1}	3000	2500
Rated torque	★	T_R	N·m	48	70
Continuous torque at stall	★	T_S	N·m	48	70
Peak torque at stall	★	T_P	N·m	135	195
Rated armature current	★	I_R	Arms	26.3	28.3
Continuous armature current at stall	★	I_S	Arms	25.1	27.5
Peak armature current at stall	★	I_P	Arms	83	83
Torque constant	☆	K_T	N·m/Arms	2.1	2.82
Voltage constant per phase	☆	$K_{E\phi}$	mV/min^{-1}	73.3	98.5
Phase resistance	☆	R_ϕ	Ω	0.117	0.145
Rated power rate	★	Q_R	kW/s	549	766
Rotor inertia		J_M	$\times 10^{-4}$kg·m² ($GD^2/4$)	42	64
Encoder inertia(1)		J_S	$\times 10^{-4}$kg·m² ($GD^2/4$)	0.012	
Motor mass(1)		W_e	kg	39 (44)	52 (59)
Brake static friction torque		Tb	N·m	53.9 min.	75 min.
Brake rated voltage		Vb	V	90/24 VDC ± 10%	24 VDC ± 10%
Brake current consumption		Ib	A	0.37/1.4	1.5
Brake inertia		Jb	$\times 10^{-4}$kg·m² ($GD^2/4$)	5.7	8.0
Amplifier power supply capacity (rated)			kVA	9.5	13.8
Cooling fan power consumption		P_F	W	30/26 200 VAC ± 10%, single-phase, 50/60 Hz CE/UL certified: 31/29 180 to 253 VAC, single-phase, 50/60 Hz	
CE/UKCA/UL certified motor				✓	
Motor protection rating				IP65 (excluding the cooling fan)	
Size of heat dissipation aluminum plate				540 × 540 × 20 mm	610 × 610 × 30 mm
Page of dimensional drawing				p. 98	

★ Values are typical values when combined with a standard servo amplifier after thermal equilibrium is established.
☆ Values are typical values when the winding temperature is 20°C.

(1) The encoder inertia and servo motor mass values are when equipped with a battery-less absolute encoder.
Contact us for information on other encoders.
Inside ( ) are the values with brake.

■ Speed-Torque Characteristics

These are for when an input voltage of 400 VAC is used. The instantaneous zone characteristics will drop if the input voltage is below 400 VAC.

Servo motor model no.	
R1CA18750L	R1CA1811KR (2)

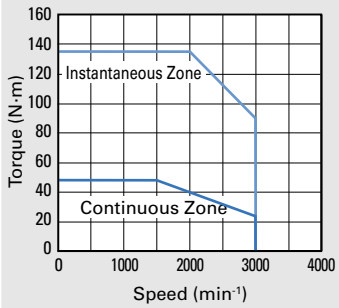

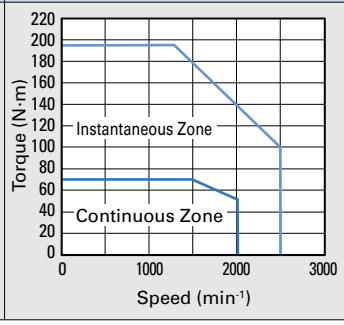

(2) Operate a motor so that the average speed does not exceed its maximum speed in the continuous zone.

180 mm sq.	220 mm sq.	Flange size			
R1CA1815KB	**R1CA2220KV**	Servo motor model no.			
RS3C15 □□ 150 A	**RS3C30** □□ 300 A	Compatible servo amplifier model no.			
		Unit	Symbol	Notes	
15	21	kW	P_R	★	Rated output
1500	1500	min^{-1}	N_R	★	Rated speed
2000	2000	min^{-1}	N_{max}	★	Maximum speed
95.5	135	N·m	T_R	★	Rated torque
95.5	135	N·m	T_S	★	Continuous torque at stall
230	380	N·m	T_P	★	Peak torque at stall
31.3	51	Arms	I_R	★	Rated armature current
30.2	49	Arms	I_S	★	Continuous armature current at stall
83	152	Arms	I_P	★	Peak armature current at stall
3.37	2.98	N·m/Arms	K_T	☆	Torque constant
117.8	104	mV/min^{-1}	$K_{E\phi}$	☆	Voltage constant per phase
0.15	0.06	Ω	R_ϕ	☆	Phase resistance
1060	1740	kW/s	Q_R	★	Rated power rate
86	105	$\times10^{-4}$kg·m² (GD²/4)	J_M		Rotor inertia
0.012		$\times10^{-4}$kg·m² (GD²/4)	J_S		Encoder inertia[(1)]
64 (73)	107	kg	W_e		Motor mass[(1)]
120 min.	–	N·m	Tb		Brake static friction torque
24 VDC ± 10%	–	V	Vb		Brake rated voltage
1.9	–	A	Ib		Brake current consumption
9.7	–	$\times10^{-4}$kg·m² (GD²/4)	Jb		Brake inertia
18.2	24.2	kVA			Amplifier power supply capacity (rated)
30/26 200 VAC ± 10%, single-phase, 50/60 Hz CE/UL certified: 31/29 180 to 253 VAC, single-phase, 50/60 Hz		W	P_F		Cooling fan power consumption
✓					CE/UKCA/UL certified motor
IP65 (excluding the cooling fan)	IP65 (excluding the cooling fan and terminal box)				Motor protection rating
610 × 610 × 30 mm					Size of heat dissipation aluminum plate
p. 98					Page of dimensional drawing

Servo motor ambient operating conditions

Operating temperature & humidity	Ambient temperature: 0 to 40°C, relative humidity: 20 to 90% or less (non-condensing)
Vibration resistance	24.5 m/s^2
Shock resistance	98 m/s^2, 2 times
Operating altitude	1,000 m or lower above sea level
Installation location	Indoors (not exposed to direct sunlight) A location free of corrosive gases, flammable gases, powder dust, and other substances that are detrimental to the used machines and motors.

Servo motor model no.

R1CA1815KB

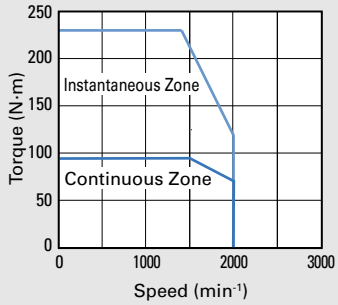

R1CA2220KV

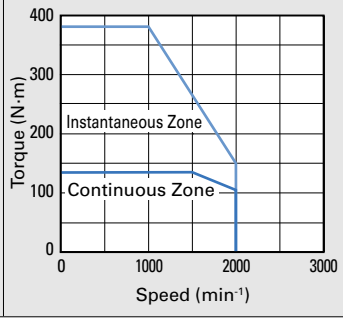

Dimensions [Unit: mm]

100 mm sq.

R2 Servo Motor 750 W to 1.0 kW

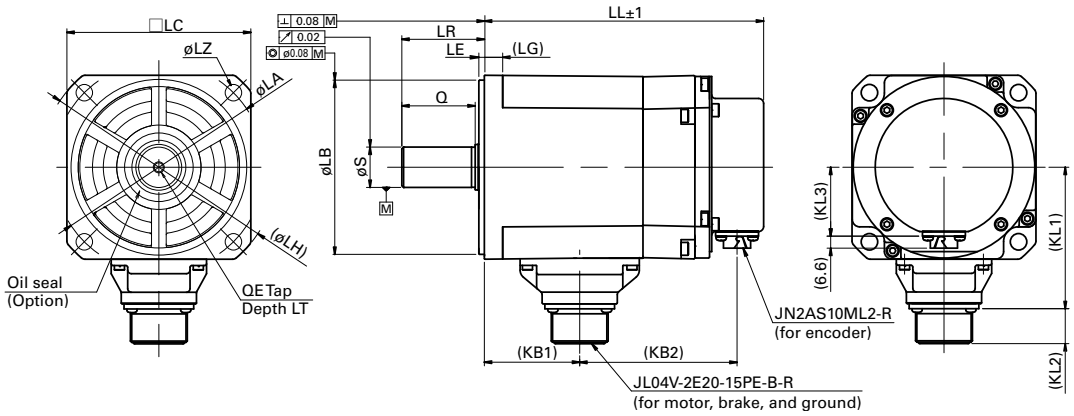

This dimensional drawing is for a servo motor equipped with a battery-less absolute encoder and a brake.

	Battery-less absolute encoder Single-turn absolute encoder															
	Without brake		With brake													
Model no.	LL	KB2	LL	KB2	LG	KL1	KL2	KL3	LA	LB	LE	LH	LC	LZ	LR	S
R2CA10075	134.8	68.3	152.3	85.8	10	77.8	19.1	37.6	115	0 95 -0.035	3	130	100	4-ø9	45	0 22 -0.013
R2CA10100	151.8		169.3													

Model no.	Q	KB1	QE	LT
R2CA10075	40	52	M6	20
R2CA10100		69		

130 mm sq.

R2 Servo Motor 550 W to 1.8 kW

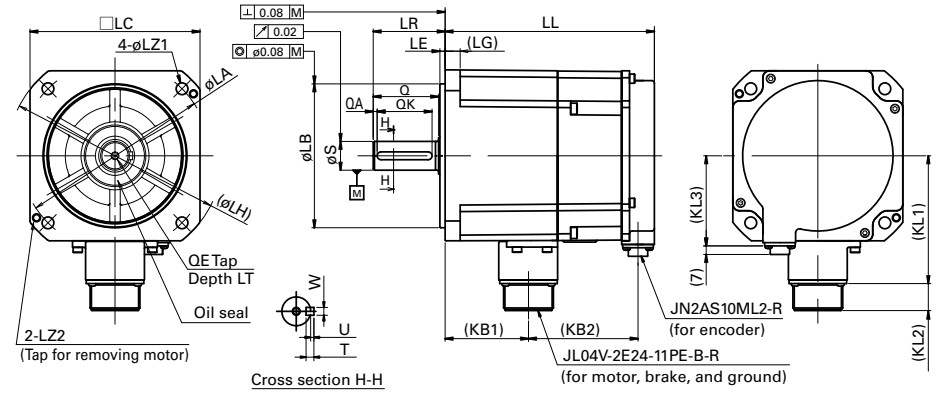

This dimensional drawing is for a servo motor equipped with a battery-less absolute encoder and a brake.

	Battery-less absolute encoder Single-turn absolute encoder																
	Without brake		With brake														
Model no.	LL	KB2	LL	KB2	LG	KL1	KL2	KL3	LA	LB	LE	LH	LC	LZ1	LZ2	LR	S
R2CA13050	103	44	139.5	81	12	98	21	69	145	0 110 -0.035	4	165	130	9	M6	55	0 22 -0.013
R2CA13120	120.5		160	84													
R2CA13180	138		179	86													

Model no.	Q	QA	QK	W	T	U	KB1	QE	LT
R2CA13050	50	3	42	0 6 -0.030	6	2.5	46	M6	20
R2CA13120							64		
R2CA13180							81		

130 mm sq.

R2 Servo Motor 2 kW

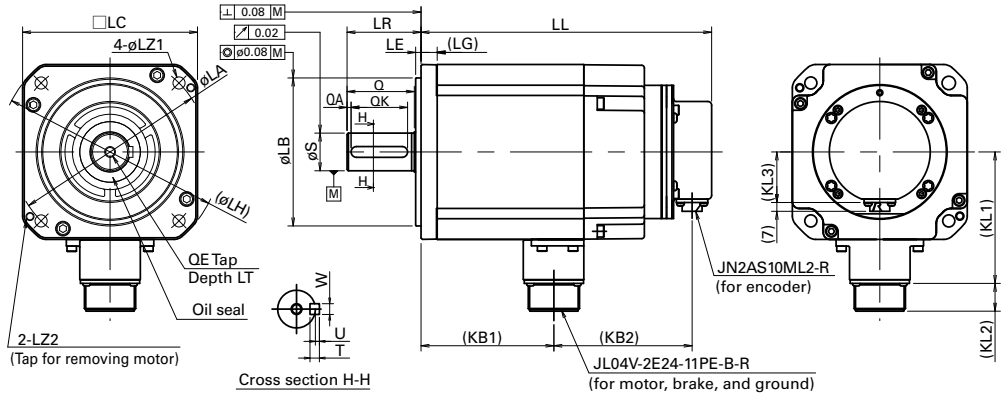

This dimensional drawing is for a servo motor equipped with a battery-less absolute encoder and a brake.

	Battery-less absolute encoder Single-turn absolute encoder																
	Without brake		With brake														
Model no.	LL	KB2	LL	KB2	LG	KL1	KL2	KL3	LA	LB	LE	LH	LC	LZ1	LZ2	LR	S
R2CA13200	171	57	216	103	12	98	21	38	145	0 110 -0.035	4	165	130	9	M6	55	0 28 -0.013

Model no.	Q	QA	QK	W	T	U	KB1	QE	LT
R2CA13200	50	3	42	0 8 -0.036	7	3	99	M8	25

180 mm sq.

R2 Servo Motor 3.5 to 5.5 kW

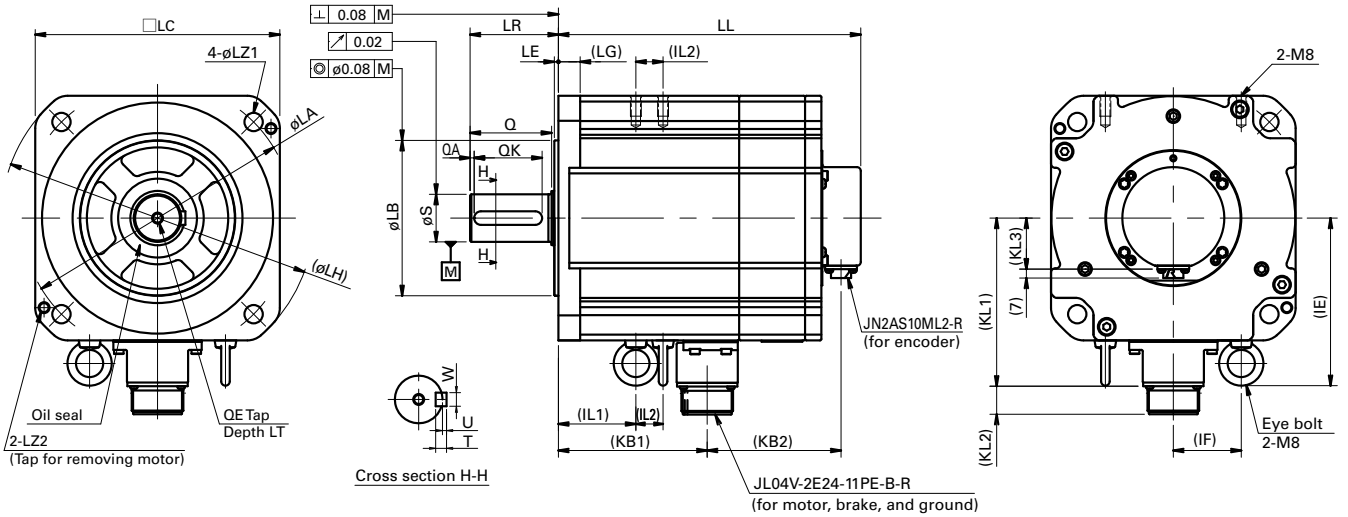

This dimensional drawing is for a servo motor equipped with a battery-less absolute encoder and a brake.

	Battery-less absolute encoder Single-turn absolute encoder																	
	Without brake		With brake															
Model no.	LL	KB2	LL	KB2	LG	KL1	KL2	KL3	LA	LB	LE	LH	LC	LZ1	LZ2	LR	S	Q
R2CA18350	159	52	206	99	16	123	21	38	200	0 114.3 -0.035	3	230	180	13.5	M8	65	0 35 -0.016	60
R2CA18450	176		223															
R2CA18550	228		274													79	0 42 -0.016	75

Model no.	QA	QK	W	T	U	KB1	QE	LT	IE	IF	IL1	IL2
R2CA18350	3	50	0 10 -0.036	8	3	92	M8	25	123	50	47	20
R2CA18450						109					57	
R2CA18550		67	0 12 -0.043			161	M10				63	41

Dimensions [Unit: mm]

180 mm sq.

R2 Servo Motor 7.5 kW

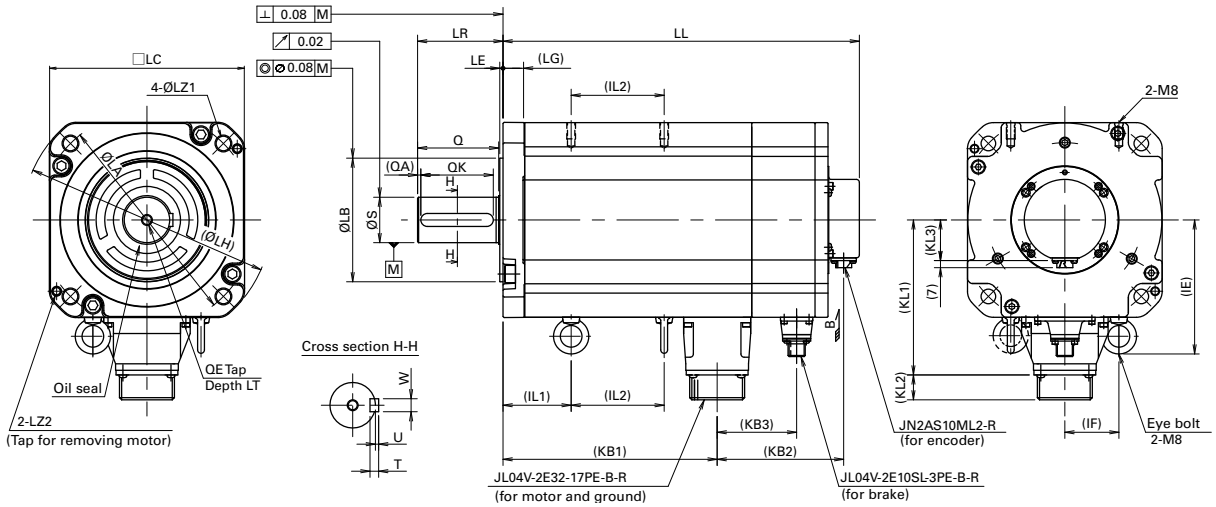

This dimensional drawing is for a servo motor equipped with a battery-less absolute encoder and a brake.

	Battery-less absolute encoder Single-turn absolute encoder																	
	Without brake			With brake														
Model no.	LL	KB2	KB3	LL	KB2	KB3	LG	KL1	KL2	KL3	LA	LB	LE	LH	LC	LZ1	LZ2	LR
R2CA18750	273	59	–	329	117	74	19	144	22	38	200	0 114.3 -0.035	3	230	180	13.5	M8	79

Model no.	S	Q	QA	QK	W	T	U	KB1	QE	LT	IE	IF	IL1	IL2
R2CA18750	0 42 -0.016	75	3	67	0 12 -0.036	8	3	198	M10	25	123	50	63	86

220 mm sq.

R2 Servo Motor 11 to 15 kW

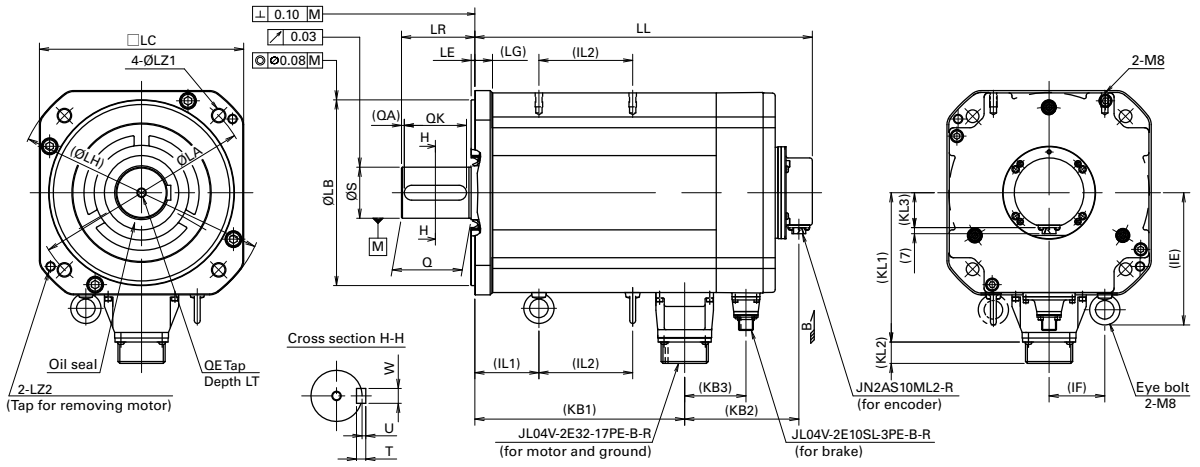

This dimensional drawing is for a servo motor equipped with a battery-less absolute encoder and a brake.

	Battery-less absolute encoder Single-turn absolute encoder																	
	Without brake			With brake														
Model no.	LL	KB2	KB3	LL	KB2	KB3	LG	KL1	KL2	KL3	LA	LB	LE	LH	LC	LZ1	LZ2	LR
R2CA2211K	304	63	–	364	123	66	19	162	22	38	235	0 200 -0.046	4	270	220	13.5	M10	79
R2CA2215K	397	78	–	501	182	90												

Model no.	S	Q	QA	QK	W	T	U	KB1	QE	LT	IE	IF	IL1	IL2
R2CA2211K	0 55 -0.019	75	3	67	0 16 -0.043	10	4	226	M10	25	142	60	69	101
R2CA2215K								304					98	150

220 mm sq.

R2 Servo Motor 20 kW

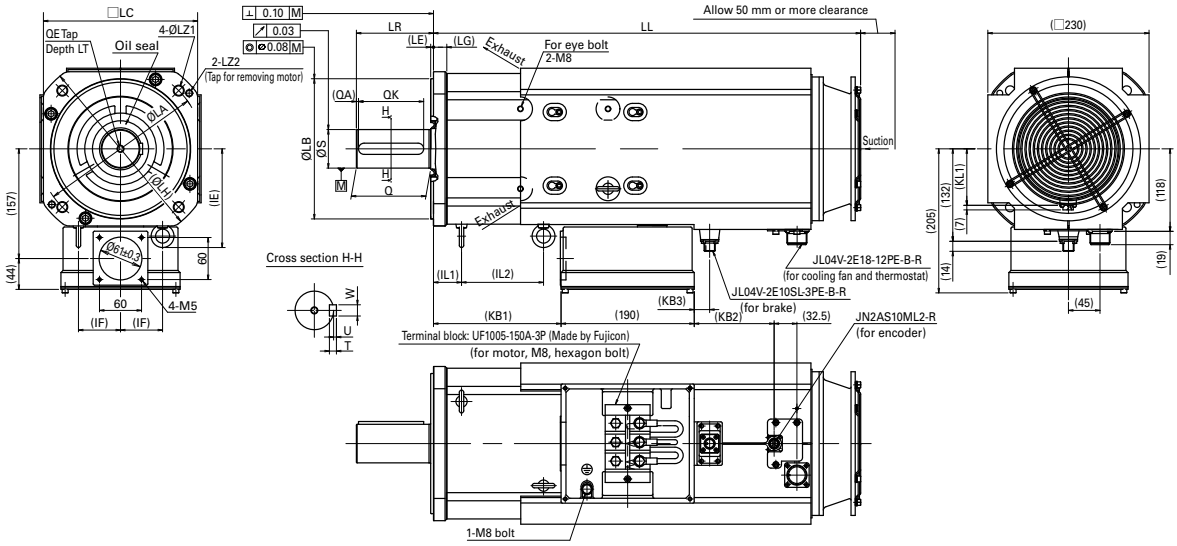

This dimensional drawing is for a servo motor equipped with a battery-less absolute encoder and a brake.

	Battery-less absolute encoder Single-turn absolute encoder																
	Without brake			With brake													
Model no.	LL	KB2	KB3	LL	KB2	KB3	LG	KL1	LA	LB	LE	LH	LC	LZ1	LZ2	LR	S	Q
R2CA2220K	505	10	–	609	114	22	19	81	235	0 200 -0.046	4	270	220	13.5	M10	110	0 55 -0.019	106

Model no.	QA	QK	W	T	U	KB1	QE	LT	IE	IF	IL1	IL2
R2CA2220K	3	93	0 16 -0.043	10	4	182	M10	25	142	60	40	117

275 mm sq.

R2 Servo Motor 30 kW

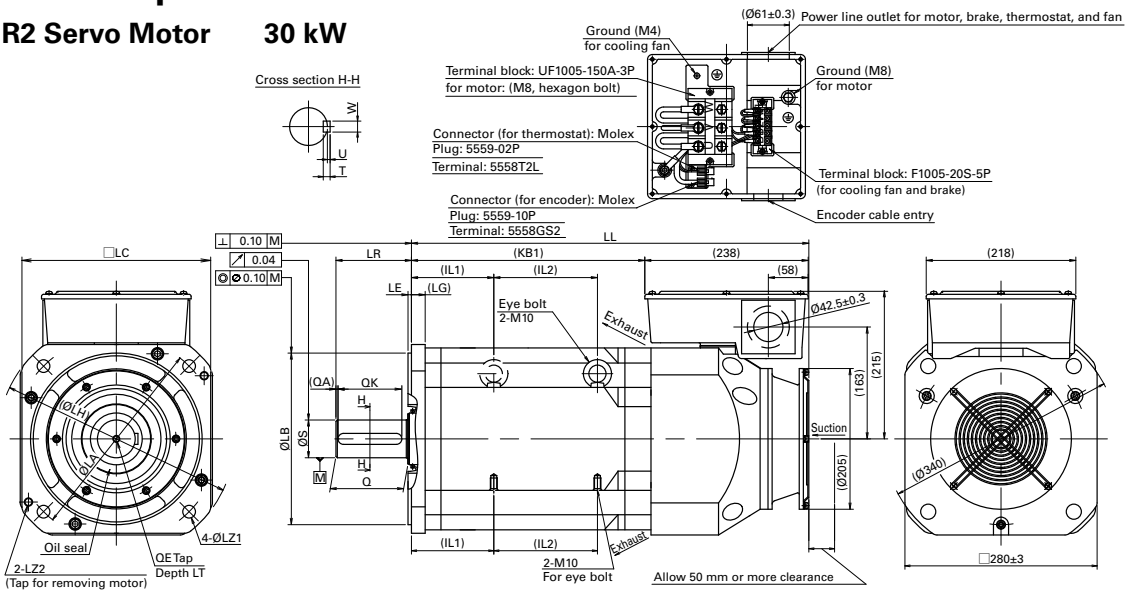

This dimensional drawing is for a servo motor equipped with a battery-less absolute encoder and a brake.

	Battery-less absolute encoder Single-turn absolute encoder																	
	Without brake			With brake														
Model no.	LL	KB1	IL2	LL	KB1	IL2	LG	LA	LB	LE	LH	LC	LZ1	LZ2	LR	S	Q	QA
R2CA2830K	479	240	50	579	340	151	20	300	0 250 -0.052	5	345	275	18.5	M12	110	0 55 -0.019	105	3

Model no.	QK	W	T	U	QE	LT	IL1
R2CA2830K	93	0 16 -0.043	10	4	M10	25	120

Dimensions [Unit: mm]

320 mm sq.

R2 Servo Motor 55 kW

Model no.: R2CA3255KB

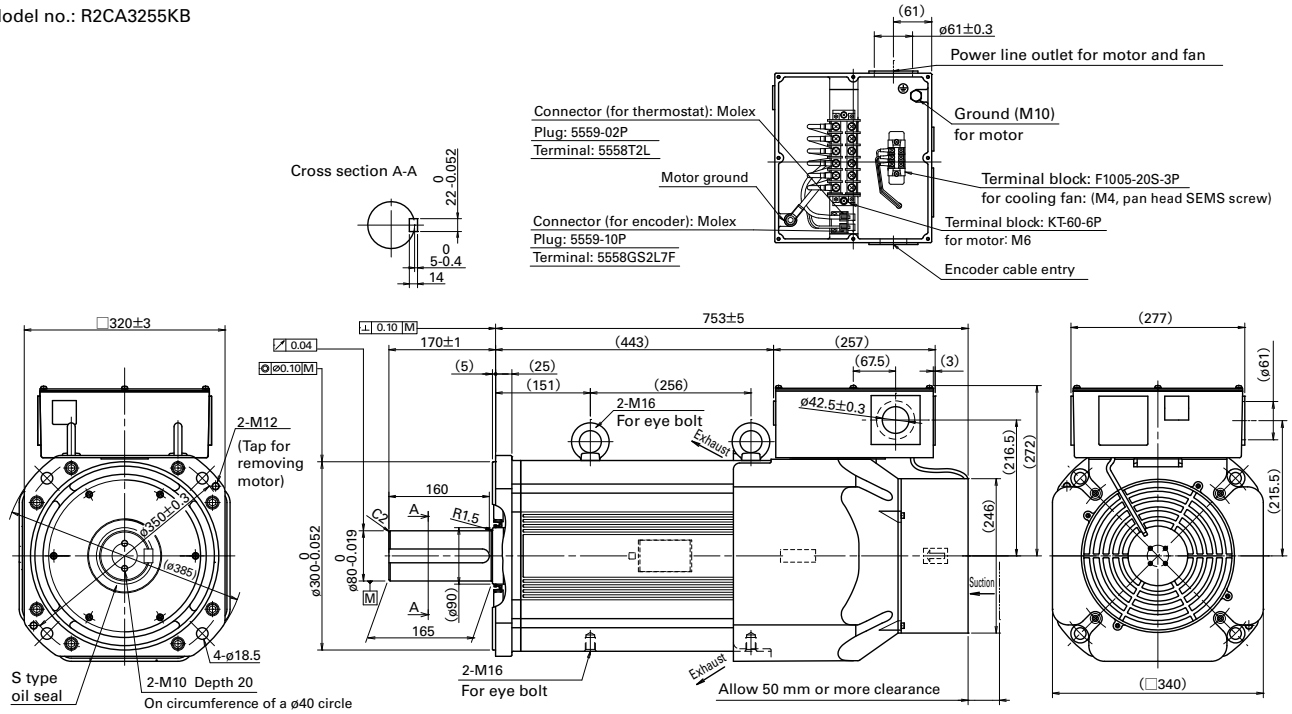

This dimensional drawing is for a servo motor equipped with a battery-less absolute encoder and no brake.

100 mm sq.

R1 Servo Motor 1.5 to 2.0 kW

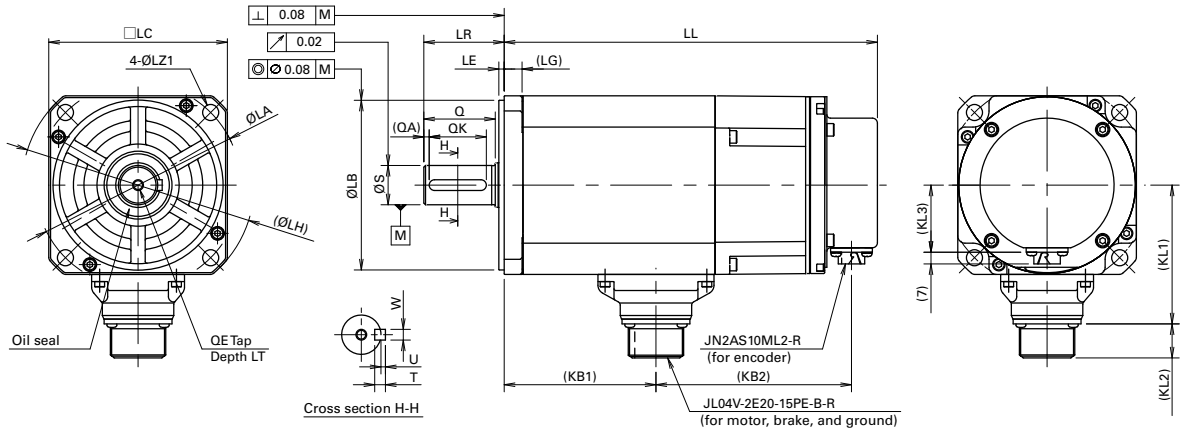

This dimensional drawing is for a servo motor equipped with a battery-less absolute encoder and a brake.

	Battery-less absolute encoder Single-turn absolute encoder															
	Without brake		With brake													
Model no.	LL	KB2	LL	KB2	LG	KL1	KL2	KL3	LA	LB	LE	LH	LC	LZ1	LR	S
R1CA10150	168	68	209	109	10	78	19	38	115	0 95 -0.035	3	130	100	9	45	0 22 -0.013
R1CA10200	179		220													

Model no.	Q	QA	QK	W	T	U	KB1	QE	LT
R1CA10150	40	3	32	0 6 -0.03	6	2.5	85	M6	20
R1CA10200							96		

130 mm sq.

R1 Servo Motor 3.0 kW

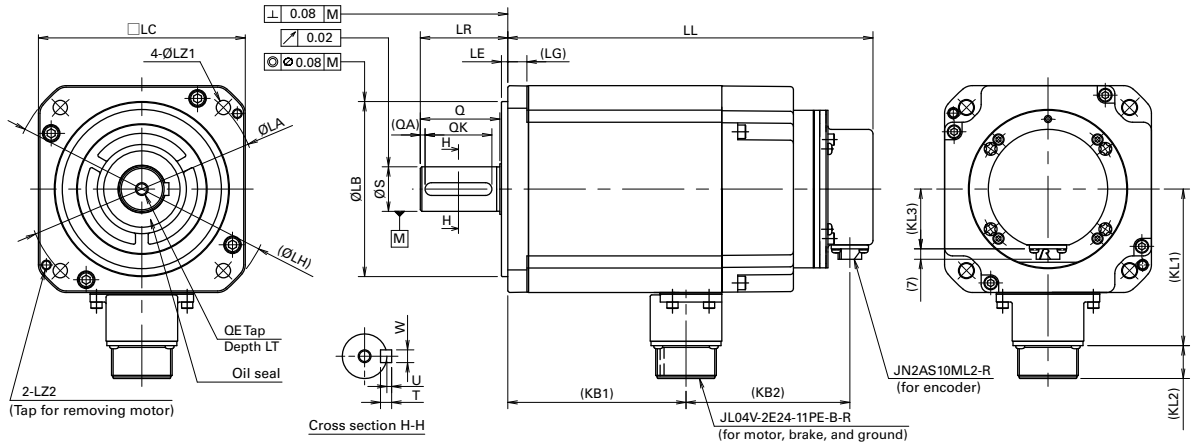

This dimensional drawing is for a servo motor equipped with a battery-less absolute encoder and a brake.

	Battery-less absolute encoder Single-turn absolute encoder															
	Without brake		With brake													
Model no.	LL	KB2	LL	KB2	LG	KL1	KL2	KL3	LA	LB	LE	LH	LC	LZ1	LZ2	LR
R1CA13300	184	57	230	103	12	98	21	38	145	0 110 -0.035	4	165	130	9	M6	55

Model no.	S	Q	QA	QK	W	T	U	KB1	QE	LT
R1CA13300	0 28 -0.013	50	3	42	0 8 -0.036	7	3	112	M8	25

Dimensions [Unit: mm]

180 mm sq.

R1 Servo Motor 5.5 to 15 kW

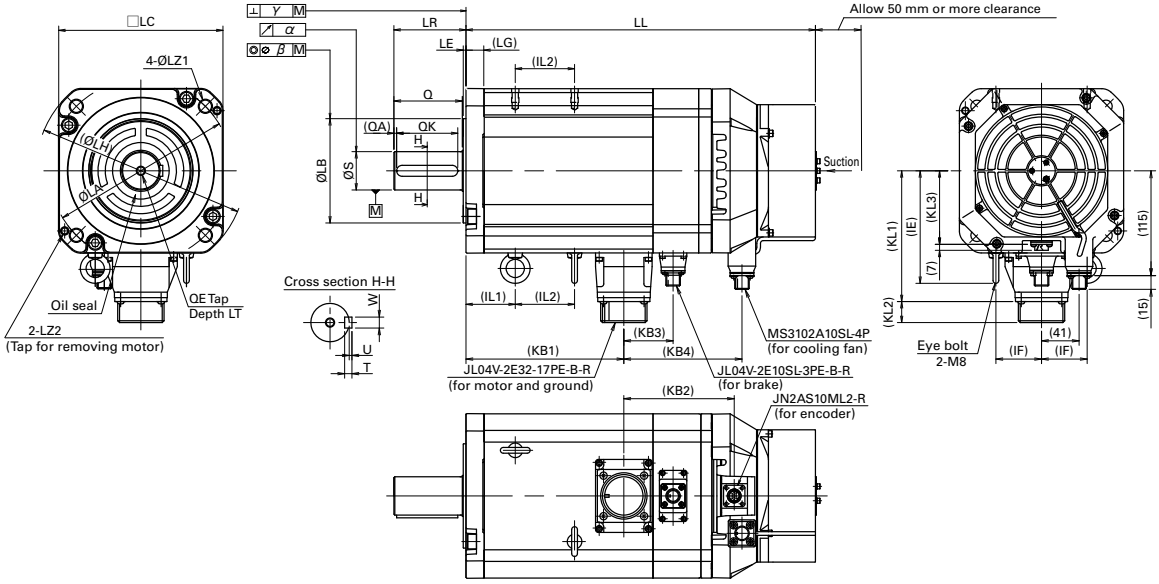

This dimensional drawing is for a servo motor equipped with a battery-less absolute encoder and a brake.

	Battery-less absolute encoder Single-turn absolute encoder																		
	Without brake				With brake														
Model no.	LL	KB2	KB3	KB4	LL	KB2	KB3	KB4	LG	KL1	KL2	KL3	LA	LB	LE	LH	LC	LZ1	LZ2	LR
R1CA18550	333	80.5	–	79.5	383	130.5	54	129.5	19.5	143	23	81	200	0 114.3 -0.035	3	230	180	13.5	M8	79
R1CA18750	368				418															
R1CA1811K	438				517	149	79	158												
R1CA1815K	516				628	182	110	191	19											

Model no.	S	Q	QA	QK	W	T	U	KB1	α	β	γ	QE	LT	IE	IF	IL1	IL2
R1CA18550	0 42 -0.016	75	3	67	0 12 -0.043	8	3	173	0.02	0.08	0.08	M10	25	124	50	54	65
R1CA18750								208								68	85
R1CA1811K								278	0.03		0.10					68	163
R1CA1815K	0 55 -0.019				0 16 -0.043	10	4	356								92	210

220 mm sq.

R1 Servo Motor 21 kW

Model no.: R1CA2220KV

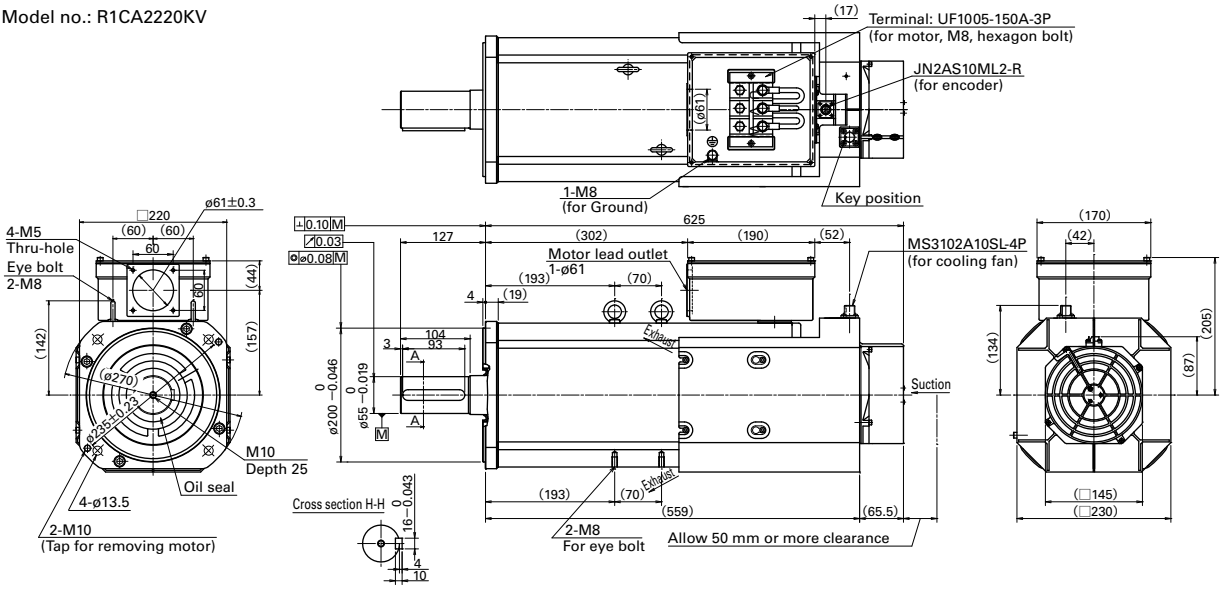

This dimensional drawing is for a servo motor equipped with a battery-less absolute encoder and no brake.

Options

Setup Software ..... p. 100

Servo Amplifier Connectors ..... p. 102

Motor Power Connectors and Wire Size ..... p. 110

Encoder Connectors ..... p. 112

Cables ..... p. 113

AC Reactors ..... p. 118

Analog Monitor ..... p. 118

External Regenerative Resistors ..... p. 119

Front Mounting Brackets ..... p. 119

Setup software

This software allows you to set servo system parameters from a PC.
It also allows you to easily start up and run tests for the servo system.
The software can be downloaded from Product Information on our website.
https://www.sanyodenki.com/

■ Setup software name

SANMOTION MOTOR SETUP SOFTWARE

■ Main functions

Parameter settings (by group, by function)

Diagnosis (alarm indication, warning indication, alarm cancellation)

Test run execution (speed jog, positioning operation, motor home position search, serial encoder clearance)

Servo tuning (notch filter tuning, FF vibration control frequency tuning)

Various measurement functions (operating waveform display, machinery frequency response measurement)

Use a USB communication cable (Mini-B) to connect the USB port on the PC and the servo amplifier.

■ Supported OS

Windows® 10/11

See our website for information on supported OS versions.

Please note the following points when replacing our conventional SANMOTION R servo amplifiers with the SANMOTION R 3E Model series amplifiers.
Beware that the SANMOTION R Setup Software cannot be used.
Use an optional product or a USB cable available on the market (with Mini USB connector on the servo amplifier side) for communication cable.

Examples of setting screens and functions with SANMOTION R 3E Model

Start-up screen

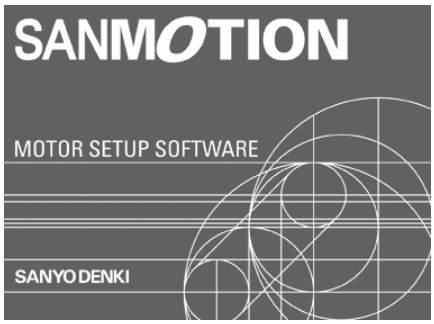

Main screen

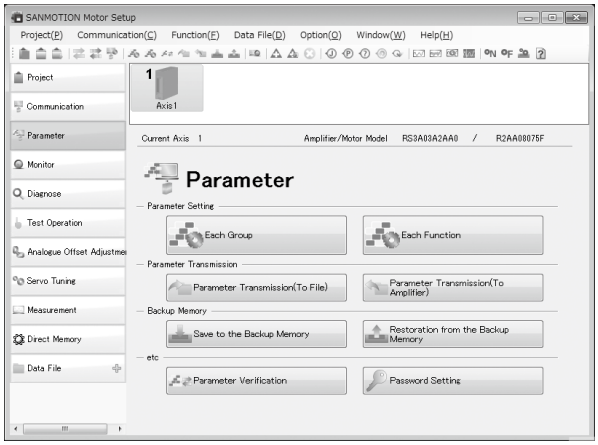

Parameter setting screen

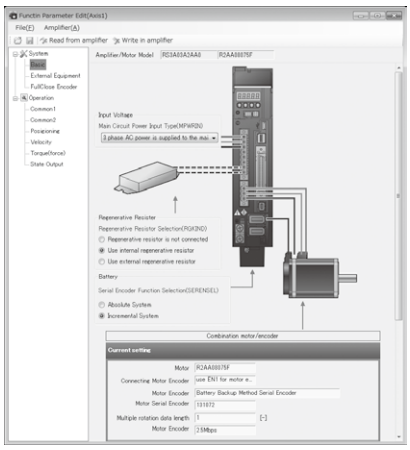

Parameter setting by group
Minimum required parameter settings by function can be done.

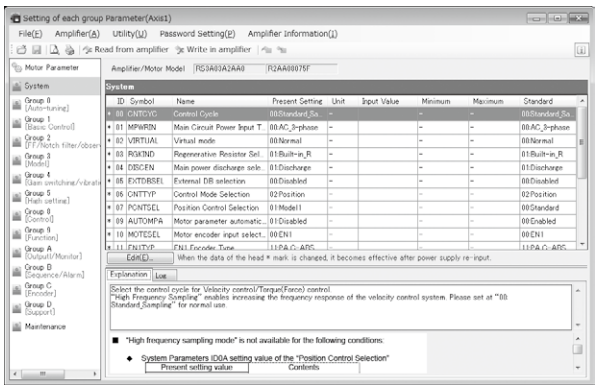

Parameter settings screen by group
Parameters can be set, saved, and more.

Diagnosis screen

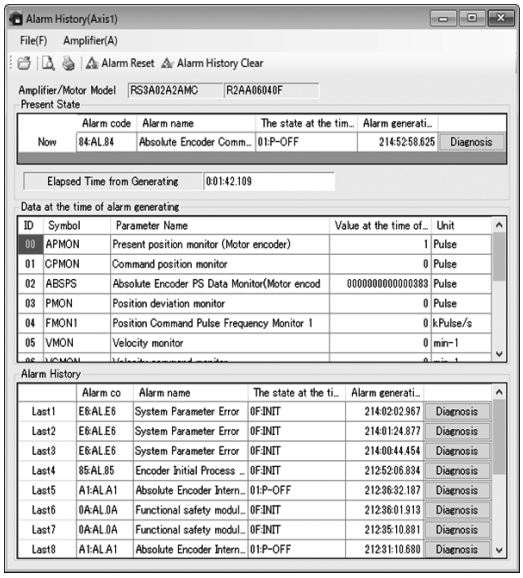

The current and past 15 alarm occurrences can be checked.

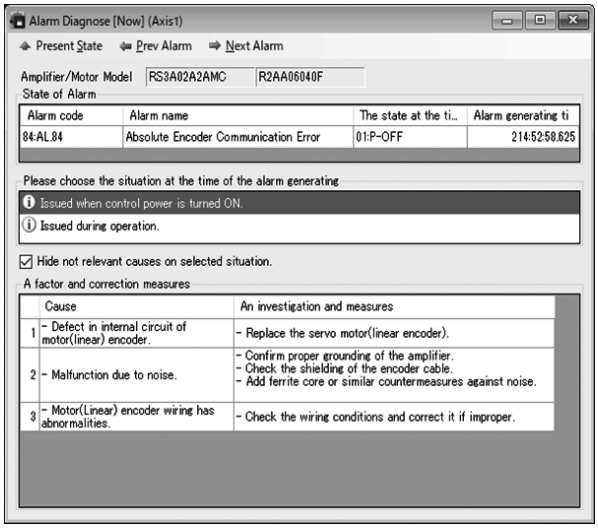

Causes and corrective actions can be checked based on alarm status.

Test run

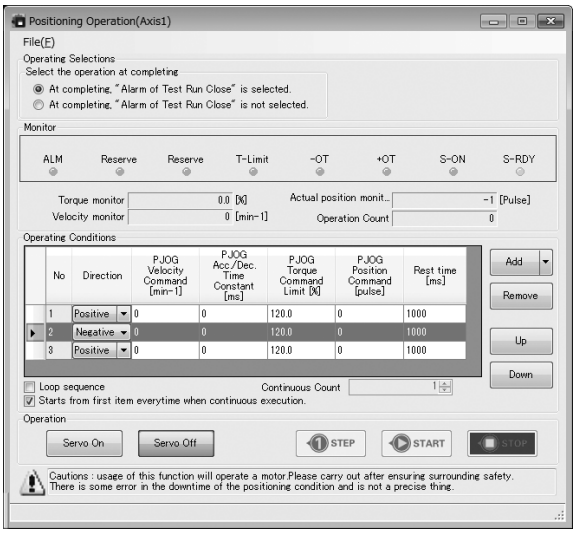

Servo motor test runs can be performed easily by issuing velocity commands and position commands from a PC.
(Shows position jog operation)

Servo tuning assist

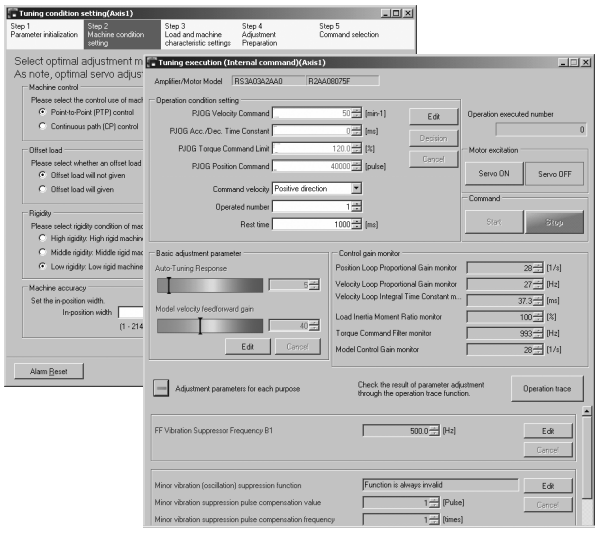

By setting the mechanical conditions, servo tuning can be easily made with the optimal tuning mode.

Measurement

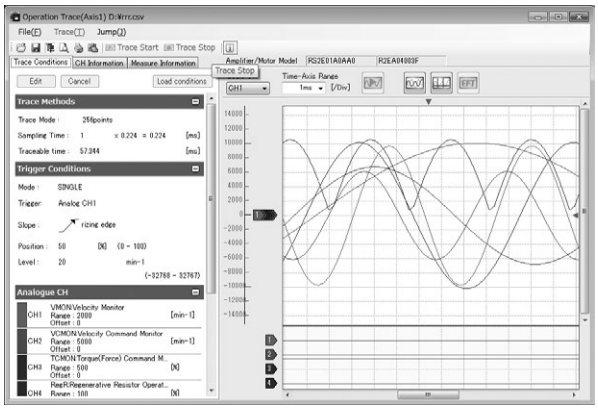

Operation tracing
Graphically displays servo motor's speed, torque, and internal status.

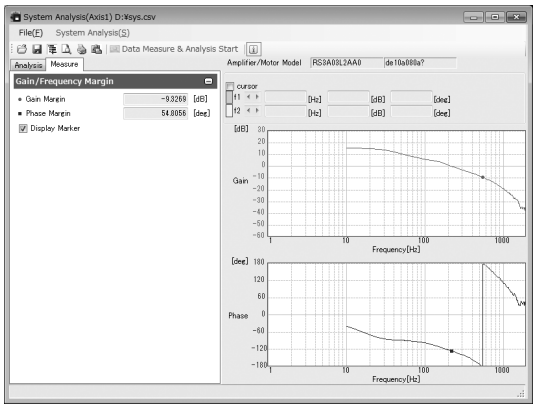

System analysis
Analyzes servo system frequency characteristics.

Servo Amplifier Connectors

■ Analog/Pulse input type

25 to 100 A

Individual connectors

Connector no.	Description	Model no.	Manufacturer part no.	Manufacturer
CN1	Controller connection	AL-00385594	10150-3000PE and 10350-52A0-008	3M Japan Limited
EN1	Encoder connection	AL-00632607	36210-0100PL and 36310-3200-008	
EN2	Encoder connection	AL-00632607	36210-0100PL and 36310-3200-008	
CN4(1)	Safety device connection (for short-circuiting)	AL-00849548-02	1971153-2	Tyco Electronics Japan G.K.
CN4	Safety device connection (for wiring)	AL-00718252-01	2013595-3	
CNA(2)	Main circuit power supply connection	AL-00953863-01	03JFAT-SAXGDK-P15	J.S.T.
CNB(2)	Servo motor connection	AL-00953865-01	03JFAT-SAZGDK-P15	
CNC(2)	Regenerative resistor connection	AL-00953864-01	03JFAT-SAYGDK-P15	
Connector tool	For CNA, CNB, and CNC	AL-00953866-01	J-FAT-OT-P	
CND(2)	Control circuit power supply connection	AL-00961843-01	04JFAT-SAGG-G-KK	
Connector tool	For CND	AL-00961844-01	J-FAT-OT(N)	
CNE	Holding brake power output	AL-00953867-01	02MJFAT-SAGF	
Connector tool	For CNE	AL-00953868-01	MJFAT-OT	
SF-CN1	Safety device connection (for Functional Safety models only)	AL-Y0012189-01	DFMC 0,5/10-ST-2,54	Phoenix Contact K.K.
SF-CN2	Safety device connection (for Functional Safety models only)	AL-Y0012189-01	DFMC 0,5/10-ST-2,54	

(1) When CN4 is not used, be sure to buy and insert the (short-circuiting) safety device connector to CN4 on the servo amplifier.
(2) Servo amplifiers come with one piece of each CNA, CNB, CNC, and CND.

Connector sets (for non-STO models)

Connector set no.		AL-00723290	AL-00966991	AL-00966993	AL-00966995
Connectors included in the set	CN1: Controller connection	✓	✓	✓	✓
	EN1: Encoder connection	✓	✓	✓	✓
	EN2: Encoder connection	–	–	✓	✓
	CNE: Holding brake connection	–	✓	–	✓
	Connector tool for CNE	–	✓	–	✓
Remarks				For fully closed-loop systems	

Connector sets (for STO models)

Connector set no.		AL-00723159	AL-00967013	AL-00967015	AL-00967017
Connectors included in the set	CN1: Controller connection	✓	✓	✓	✓
	EN1: Encoder connection	✓	✓	✓	✓
	EN2: Encoder connection	–	–	✓	✓
	CN4: Safety device connection (for wiring)	✓	✓	✓	✓
	CNE: Holding brake connection	–	✓	–	✓
	Connector tool for CNE	–	✓	–	✓
Remarks				For fully closed-loop systems	

■ Analog/Pulse input type

150, 300 A

Individual connectors

Connector no.	Description	Model no.	Manufacturer part no.	Manufacturer
CN1	Controller connection	AL-00385594	10150-3000PE and 10350-52A0-008	3M Japan Limited
EN1	Encoder connection	AL-00632607	36210-0100PL and 36310-3200-008	
EN2	Encoder connection	AL-00632607	36210-0100PL and 36310-3200-008	
CN4*	Safety device connection (for short-circuiting)	AL-00849548-02	1971153-2	Tyco Electronics Japan G.K.
CN4	Safety device connection (for wiring)	AL-00718252-01	2013595-3	
SF-CN1	Safety device connection (for Functional Safety models only)	AL-Y0012189-01	DFMC 0,5/10-ST-2,54	Phoenix Contact K.K.
SF-CN2	Safety device connection (for Functional Safety models only)	AL-Y0012189-01	DFMC 0,5/10-ST-2,54	

* When CN4 is not used, be sure to buy and insert the (short-circuiting) safety device connector to CN4 on the servo amplifier.

Connector sets (for non-STO models)

Connector set no.		AL-00723290	AL-00966993
Connectors included in the set	CN1: Controller connection	✓	✓
	EN1: Encoder connection	✓	✓
	EN2: Encoder connection	–	✓
Remarks			For fully closed-loop systems

Connector sets (for STO models)

Connector set no.		AL-00723159	AL-00967015
Connectors included in the set	CN1: Controller connection	✓	✓
	EN1: Encoder connection	✓	✓
	EN2: Encoder connection	–	✓
	CN4: Safety device connection (for wiring)	✓	✓
Remarks			For fully closed-loop systems

800 A

Individual connectors

Connector no.	Description	Model no.	Manufacturer part no.	Manufacturer
CN1	Controller connection	AL-00385594	10150-3000PE and 10350-52A0-008	3M Japan Limited
EN1	Encoder connection	AL-00632607	36210-0100PL and 36310-3200-008	
EN2	Encoder connection	AL-00632607	36210-0100PL and 36310-3200-008	
CN4(1)	Safety device connection (for short-circuiting)	AL-00849548-02	1971153-2	Tyco Electronics Japan G.K.
CN4	Safety device connection (for wiring)	AL-00718252-01	2013595-3	
CN10(2)	Power supply unit connection	AL-01017659	DF02P036F22A1 and DF02D036A22	Japan Aviation Electronics Industry, Ltd.
SF-CN1	Safety device connection (for Functional Safety models only)	AL-Y0012189-01	DFMC 0,5/10-ST-2,54	Phoenix Contact K.K.
SF-CN2	Safety device connection (for Functional Safety models only)	AL-Y0012189-01	DFMC 0,5/10-ST-2,54	

(1) When CN4 is not used, be sure to buy and insert the (short-circuiting) safety device connector to CN4 on the servo amplifier.
(2) There are two mating CN10 connectors: the power supply unit side and the amplifier unit side.

Connector sets (for non-STO models)

Connector set no.		AL-00723290	AL-00966993
Connectors included in the set	CN1: Controller connection	✓	✓
	EN1: Encoder connection	✓	✓
	EN2: Encoder connection	–	✓
Remarks			For fully closed-loop systems

Connector sets (for STO models)

Connector set no.		AL-00723159	AL-00967015
Connectors included in the set	CN1: Controller connection	✓	✓
	EN1: Encoder connection	✓	✓
	EN2: Encoder connection	–	✓
	CN4: Safety device connection (for wiring)	✓	✓
Remarks			For fully closed-loop systems

Servo Amplifier Connectors

■ EtherCAT type

25 to 100 A

Individual connectors

Connector no.	Description	Model no.	Manufacturer part no.	Manufacturer
IN, OUT	Ethernet Controller connection	Please prepare by yourself. Use a CAT5e standard-compliant shielded type modular plug (RJ-45).		
EN1	Encoder connection	AL-00530312-01	54599-1019	Molex Japan Co., Ltd.
EN2	Encoder connection	AL-00530312-01	54599-1019	
CN2	General-purpose I/O signals	AL-00842383	HDR-E26MSG1 and HDR-E26LPH	HONDA TSUSHIN KOGYO CO., LTD.
CN4(1)	Safety device connection (for short-circuiting)	AL-00849548-02	1971153-2	Tyco Electronics Japan G.K.
CN4	Safety device connection (for wiring)	AL-00718252-01	2013595-3	
CNA(2)	Main circuit power supply connection	AL-00953863-01	03JFAT-SAXGDK-P15	J.S.T.
CNB(2)	Servo motor connection	AL-00953865-01	03JFAT-SAZGDK-P15	
CNC(2)	Regenerative resistor connection	AL-00953864-01	03JFAT-SAYGDK-P15	
Connector tool	For CNA, CNB, and CNC	AL-00953866-01	J-FAT-OT-P	
CND(2)	Control circuit power supply connection	AL-00961843-01	04JFAT-SAGG-G-KK	
Connector tool	For CND	AL-00961844-01	J-FAT-OT(N)	
CNE	Holding brake power output	AL-00953867-01	02MJFAT-SAGF	
Connector tool	For CNE	AL-00953868-01	MJFAT-OT	
SF-CN1	Safety device connection (for Functional Safety models only)	AL-Y0012189-01	DFMC 0,5/10-ST-2,54	Phoenix Contact K.K.
SF-CN2	Safety device connection (for Functional Safety models only)	AL-Y0012189-01	DFMC 0,5/10-ST-2,54	

(1) A safety device connector for CN4 (for short-circuiting) is included with a servo amplifier.
(2) Servo amplifiers come with one piece of each CNA, CNB, CNC, and CND.

Connector sets (for STO models)

Connector set no.		AL-00977732	AL-00977750	AL-01002534	AL-00977752	AL-00977754	AL-01002536
Connectors included in the set	EN1: Encoder connection	✓	✓	✓	✓	✓	✓
	EN2: Encoder connection	–	–	–	✓	✓	✓
	CNE: Holding brake connection	–	✓	–	–	✓	–
	Connector tool for CNE	–	✓	–	–	✓	–
	CN4: Safety device connection (for wiring)	✓	✓	–	✓	✓	–
	CN2: General-purpose I/O connections	✓	✓	✓	✓	✓	✓
Remarks					For fully closed-loop systems		

■ EtherCAT type

150, 300 A

Individual connectors

Connector no.	Description	Model no.	Manufacturer part no.	Manufacturer
IN, OUT	Ethernet Controller connection	Please prepare by yourself. Use a CAT5e standard-compliant shielded type modular plug (RJ-45).		
EN1	Encoder connection	AL-00530312-01	54599-1019	Molex Japan Co., Ltd.
EN2	Encoder connection	AL-00530312-01	54599-1019	
CN2	General-purpose I/O signals	AL-00842383	HDR-E26MSG1 and HDR-E26LPH	HONDA TSUSHIN KOGYO CO., LTD.
CN4*	Safety device connection (for short-circuiting)	AL-00849548-02	1971153-2	Tyco Electronics Japan G.K.
CN4	Safety device connection (for wiring)	AL-00718252-01	2013595-3	
SF-CN1	Safety device connection (for Functional Safety models only)	AL-Y0012189-01	DFMC 0,5/10-ST-2,54	Phoenix Contact K.K.
SF-CN2	Safety device connection (for Functional Safety models only)	AL-Y0012189-01	DFMC 0,5/10-ST-2,54	

(1) A safety device connector for CN4 (for short-circuiting) is included with a servo amplifier.

Connector sets (for STO models)

Connector set no.		AL-00977732	AL-01002534	AL-00977752	AL-01002536
Connectors included in the set	EN1: Encoder connection	✓	✓	✓	✓
	EN2: Encoder connection	–	–	✓	✓
	CN4: Safety device connection (for wiring)	✓	–	✓	–
	CN2: General-purpose I/O connections	✓	✓	✓	✓
Remarks				For fully closed-loop systems	

800 A

Individual connectors

Connector no.	Description	Model no.	Manufacturer part no.	Manufacturer
IN, OUT	Ethernet For controller connection	Please prepare by yourself. Use a CAT5e standard-compliant shielded type modular plug (RJ-45).		
EN1	Encoder connection	AL-00530312-01	54599-1019	Molex Japan Co., Ltd.
EN2	Encoder connection	AL-00530312-01	54599-1019	
CN2	General-purpose I/O signals	AL-00842383	A set of HDR-E26MSG1+ and HDR-E26LPH	HONDA TSUSHIN KOGYO CO., LTD.
CN4(1)	Safety device connection (for short-circuiting)	AL-00849548-02	1971153-2	Tyco Electronics Japan G.K.
CN4	Safety device connection (for wiring)	AL-00718252-01	2013595-3	
CN10(2)	Power supply unit connection	AL-01017659	DF02P036F22A1 and F02D036A22	Japan Aviation Electronics Industry, Ltd.
SF-CN1	Safety device connection (for Functional Safety models only)	AL-Y0012189-01	DFMC 0,5/10-ST-2,54	Phoenix Contact K.K.
SF-CN2	Safety device connection (for Functional Safety models only)	AL-Y0012189-01	DFMC 0,5/10-ST-2,54	

(1) A safety device connector for CN4 (for short-circuiting) is included with a servo amplifier.
(2) There are two mating CN10 connectors: the power supply unit side and the amplifier unit side.

Connector sets (for STO models)

Connector set no.		AL-00977732	AL-01002534	AL-00977752	AL-01002536
Connectors included in the set	EN1: Encoder connection	✓	✓	✓	✓
	EN2: Encoder connection	–	–	✓	✓
	CN2: General-purpose I/O connections	✓	✓	✓	✓
	CN4: Safety device connection (for wiring)	✓	–	✓	–
Remarks				For fully closed-loop systems	

Servo Amplifier Connector

Built-in positioning function, parallel type
25 to 100 A

Individual connectors

Connector no.	Description	Model no.	Manufacturer part no.	Manufacturer
CN1	Controller connection	AL-00385594	10150-3000PE and 10350-52A0-008	3M Japan Limited
EN1	Encoder connection	AL-00530312-01	54599-1019	Molex Japan Co., Ltd.
EN2	Encoder connection	AL-00530312-01	54599-1019	
CN4(1)	Safety device connection (for short-circuiting)	AL-00849548-02	1971153-2	Tyco Electronics Japan G.K.
CN4	Safety device connection (for wiring)	AL-00718252-01	2013595-3	
CNA(2)	Main circuit power supply connection	AL-00953863-01	03JFAT-SAXGDK-P15	J.S.T.
CNB(2)	Servo motor connection	AL-00953865-01	03JFAT-SAZGDK-P15	
CNC(2)	Regenerative resistor connection	AL-00953864-01	03JFAT-SAYGDK-P15	
Connector tool	For CNA to CNC	AL-00953866-01	J-FAT-OT-P	
CND(2)	Control circuit power supply connection	AL-00961843-01	04JFAT-SAGG-G-KK	
Connector tool	For CND	AL-00961844-01	J-FAT-OT(N)	
CNE	Holding brake power output	AL-00953867-01	02MJFAT-SAGF	
Connector tool	For CNE	AL-00953868-01	MJFAT-OT	
SF-CN1	Safety device connection (for Functional Safety models only)	AL-Y0012189-01	DFMC 0,5/10-ST-2,54	Phoenix Contact K.K.
SF-CN2	Safety device connection (for Functional Safety models only)	AL-Y0012189-01	DFMC 0,5/10-ST-2,54	

(1) A safety device connector for CN4 (for short-circuiting) is included with a servo amplifier.
(2) Servo amplifiers come with one piece of each CNA, CNB, CNC, and CND.

Connector sets (for STO models)

Connector set no.		AL-01108220	AL-01108242	AL-01108244	AL-01108245
Connectors included in the set	CN1: Controller connection	✓	✓	✓	✓
	EN1: Encoder connection	✓	✓	✓	✓
	EN2: Encoder connection	–	–	✓	✓
	CNE: Holding brake connector	–	✓	–	✓
	Connector tool for CND	–	✓	–	✓
	CN4: Safety device connection (for wiring)	✓	✓	✓	✓
Remarks				For fully closed-loop systems	

Built-in positioning function, parallel type

150 to 300 A

Individual connectors

Connector no.	Description	Model no.	Manufacturer part no.	Manufacturer
CN1	Controller connection	AL-00385594	10150-3000PE and 10350-52A0-008	3M Japan Limited
EN1	Encoder connection	AL-00530312-01	54599-1019	Molex Japan Co., Ltd.
EN2	Encoder connection	AL-00530312-01	54599-1019	
CN4*	Safety device connection (for short-circuiting)	AL-00849548-02	1971153-2	Tyco Electronics Japan G.K.
CN4	Safety device connection (for wiring)	AL-00718252-01	2013595-3	
SF-CN1	Safety device connection (for Functional Safety models only)	AL-Y0012189-01	DFMC 0,5/10-ST-2,54	Phoenix Contact K.K.
SF-CN2	Safety device connection (for Functional Safety models only)	AL-Y0012189-01	DFMC 0,5/10-ST-2,54	

(1) A safety device connector for CN4 (for short-circuiting) is included with a servo amplifier.

Connector sets (for STO models)

Connector set no.		AL-01108220	AL-01108244
Connectors included in the set	CN1: Controller connection	✓	✓
	EN1: Encoder connection	✓	✓
	EN2: Encoder connection	–	✓
	CN4: Safety device connection (for wiring)	✓	✓
Remarks			For fully closed-loop systems

800 A

Individual connectors

Connector no.	Description	Model no.	Manufacturer part no.	Manufacturer
CN1	Serial communication connection	AL-00385594	10150-3000PE and 10350-52A0-008	3M Japan Limited
EN1	Encoder connection	AL-00530312-01	54599-1019	Molex Japan Co., Ltd.
EN2	Encoder connection	AL-00530312-01	54599-1019	
CN4(1)	Safety device connection (for short-circuiting)	AL-00849548-02	1971153-2	Tyco Electronics Japan G.K.
CN4	Safety device connection (for wiring)	AL-00718252-01	2013595-3	
CN10(2)	Power supply unit connection	AL-01017659	DF02P036F22A1 and DF02D036A22	J.S.T.
SF-CN1	Safety device connection (for Functional Safety models only)	AL-Y0012189-01	DFMC 0,5/10-ST-2,54	Phoenix Contact K.K.
SF-CN2	Safety device connection (for Functional Safety models only)	AL-Y0012189-01	DFMC 0,5/10-ST-2,54	

(1) A safety device connector for CN4 (for short-circuiting) is included with a servo amplifier.
(2) There are two mating CN10 connectors: the power supply unit side and the amplifier unit side.

Connector sets (for STO models)

Connector set no.		AL-01108220	AL-01108244
Connectors included in the set	CN1: Controller connection	✓	✓
	EN1: Encoder connection	✓	✓
	EN2: Encoder connection	–	✓
	CN4: Safety device connection (for wiring)	✓	✓
Remarks			For fully closed-loop systems

Servo Amplifier Connector

■ Built-in Positioning Function, Serial Type

25 to 100 A

Individual connectors

Connector no.	Description	Model no.	Manufacturer part no.	Manufacturer
CN0, CN1	Serial communication connection	Please prepare by yourself. Prepare a shielded modular plug (RJ-45).		
EN1	Encoder connection	AL-00530312-01	54599-1019	Molex Japan Co., Ltd.
EN2	Encoder connection	AL-00530312-01	54599-1019	
CN2	General-purpose I/O signals	AL-00842383	A set of HDR-E26MSG1+ and HDR-E26LPH	HONDA TSUSHIN KOGYO CO., LTD.
CN4(1)	Safety device connection (for short-circuiting)	AL-00849548-02	1971153-2	Tyco Electronics Japan G.K.
CN4	Safety device connection (for wiring)	AL-00718252-01	2013595-3	
CNA(2)	Main circuit power supply connection	AL-00953863-01	03JFAT-SAXGDK-P15	J.S.T.
CNB(2)	Servo motor connection	AL-00953865-01	03JFAT-SAZGDK-P15	
CNC(2)	Regenerative resistor connection	AL-00953864-01	03JFAT-SAYGDK-P15	
Connector tool	For CNA to CNC	AL-00953866-01	J-FAT-OT-P	
CND(2)	Control circuit power supply connection	AL-00961843-01	04JFAT-SAGG-G-KK	
Connector tool	For CND	AL-00961844-01	J-FAT-OT(N)	
CNE	Holding brake power output	AL-00953867-01	02MJFAT-SAGF	
Connector tool	For CNE	AL-00953868-01	MJFAT-OT	
SF-CN1	Safety device connection (for Functional Safety models only)	AL-Y0012189-01	DFMC 0,5/10-ST-2,54	Phoenix Contact K.K.
SF-CN2	Safety device connection (for Functional Safety models only)	AL-Y0012189-01	DFMC 0,5/10-ST-2,54	

(1) A safety device connector for CN4 (for short-circuiting) is included with a servo amplifier.
(2) Servo amplifiers come with one piece of each CNA, CNB, CNC, and CND.

Connector sets (for STO models)

Connector set no.		AL-00977732	AL-00977750	AL-01002534	AL-00977752	AL-00977754	AL-01002536
Connectors included in the set	EN1: Encoder connection	✓	✓	✓	✓	✓	✓
	EN2: Encoder connection	–	–	–	✓	✓	✓
	CNE: Holding brake connector	–	✓	–	–	✓	–
	Connector tool for CNE	–	✓	–	–	✓	–
	CN4: Safety device connection (for wiring)	✓	✓	–	✓	✓	–
	CN2: General-purpose I/O connections	✓	✓	✓	✓	✓	✓
Remarks					For fully closed-loop systems		

■ Built-in Positioning Function, Serial Type

150 to 300 A

Individual connectors

Connector no.	Description	Model no.	Manufacturer part no.	Manufacturer
CN0, CN1	Serial communication connection	Please prepare by yourself. Prepare a shielded modular plug (RJ-45).		
EN1	Encoder connection	AL-00530312-01	54599-1019	Molex Japan Co., Ltd.
EN2	Encoder connection	AL-00530312-01	54599-1019	
CN2	General-purpose I/O signals	AL-00842383	A set of HDR-E26MSG1+ and HDR-E26LPH	HONDA TSUSHIN KOGYO CO., LTD.
CN4*	Safety device connection (for short-circuiting)	AL-00849548-02	1971153-2	Tyco Electronics Japan G.K.
CN4	Safety device connection (for wiring)	AL-00718252-01	2013595-3	
SF-CN1	Safety device connection (for Functional Safety models only)	AL-Y0012189-01	DFMC 0,5/10-ST-2,54	Phoenix Contact K.K.
SF-CN2	Safety device connection (for Functional Safety models only)	AL-Y0012189-01	DFMC 0,5/10-ST-2,54	

* A safety device connector for CN4 (for short-circuiting) is included with a servo amplifier.

Connector sets (for STO models)

Connector set no.		AL-00977732	AL-01002534	AL-00977752	AL-01002536
Connectors included in the set	EN1: Encoder connection	✓	✓	✓	✓
	EN2: Encoder connection	–	–	✓	✓
	CN4: Safety device connection (for wiring)	✓	–	✓	–
	CN2: General-purpose I/O connections	✓	✓	✓	✓
Remarks				For fully closed-loop systems	

800 A

Individual connectors

Connector no.	Description	Model no.	Manufacturer part no.	Manufacturer
CN0, CN1	Serial communication connection	Please prepare by yourself. Prepare a shielded modular plug (RJ-45).		
EN1	Encoder connection	AL-00530312-01	54599-1019	Molex Japan Co., Ltd.
EN2	Encoder connection	AL-00530312-01	54599-1019	
CN2	General-purpose I/O signals	AL-00842383	A set of HDR-E26MSG1+ and HDR-E26LPH	HONDA TSUSHIN KOGYO CO., LTD.
CN4(1)	Safety device connection (for short-circuiting)	AL-00849548-02	1971153-2	Tyco Electronics Japan G.K.
CN4	Safety device connection (for wiring)	AL-00718252-01	2013595-3	
CN10(2)	Power supply unit connection	AL-01017659	DF02P036F22A1 and DF02D036A22	J.S.T.
SF-CN1	Safety device connection (for Functional Safety models only)	AL-Y0012189-01	DFMC 0,5/10-ST-2,54	Phoenix Contact K.K.
SF-CN2	Safety device connection (for Functional Safety models only)	AL-Y0012189-01	DFMC 0,5/10-ST-2,54	

(1) A safety device connector for CN4 (for short-circuiting) is included with a servo amplifier.
(2) There are two mating CN10 connectors: the power supply unit side and the amplifier unit side.

Connector sets (for STO models)

Connector set no.		AL-00977732	AL-01002534	AL-00977752	AL-01002536
Connectors included in the set	EN1: Encoder connection	✓	✓	✓	✓
	EN2: Encoder connection	–	–	✓	✓
	CN2: General-purpose I/O connections	✓	✓	✓	✓
	CN4: Safety device connection (for wiring)	✓	–	✓	–
Remarks				For fully closed-loop systems	

Servo Motor Power Connectors and Wire Size

Manufacturer: Japan Aviation Electronics Industry, Ltd.

The part numbers listed below are for when ordering connectors as single items. Note that cables are not included.

Flange size [mm]	Motor model no.	Power connectors, standard		Power connectors, waterproof, TÜV-compliant		Brake connectors, standard, waterproof, TÜV-compliant	
		(1) Plug (Mfr. part no.) (2) Cable clamp (Mfr. part no.) (3) Plug + cable clamp (Order no.)		(1) Plug (Mfr. part no.) (2) Cable clamp (Mfr. part no.) (3) Plug + cable clamp (Order no.)		(1) Plug (Mfr. part no.) (2) Cable clamp (Mfr. part no.) (3) Plug + cable clamp (Order no.)	
		Straight	Angled	Straight	Angled	Straight	Angled
100 sq.	R2CA10075F R2CA10100F	(1) N/MS3106B20-15S (2) N/MS3057-12A (3) MS06B20-15S-12	(1) N/MS3108B20-15S (2) N/MS3057-12A (3) MS08B20-15S-12	(1) JL04V-6A20-15SE-EB-RK (2) JL04-2022CK(12)-R (3) 332706X5	(1) JL04V-8A20-15SE-EBH-RK (2) JL04-2022CK(12)-R (3) 332707X5	Covered by the power connector on the left	
130 sq.	R2CA13050D R2CA13120R R2CA13120F R2CA13180H	(1) N/MS3106B24-11S (2) N/MS3057-16A (3) MS06B24-11S-16	(1) N/MS3108B24-11S (2) N/MS3057-16A (3) MS08B24-11S-16	(1) JL04V-6A24-11SE-EB-R (2) JL04-2428CK(11)-RK (3) 332706X10	(1) JL04V-8A24-11SE-EBH-RK (2) JL04-2428CK(11)-RK (3) 332707X10	Covered by the power connector on the left	
	R2CA13180D	(1) N/MS3106B24-11S (2) N/MS3057-16A (3) MS06B24-11S-16	(1) N/MS3108B24-11S (2) N/MS3057-16A (3) MS08B24-11S-16	(1) JL04V-6A24-11SE-EB-R (2) JL04-2428CK(17)-R (3) 332706X10	(1) JL04V-8A24-11SE-EBH-RK (2) JL04-2428CK(17)-R (3) 332707X10		
	R2CA13200L R2CA13200H	(1) N/MS3106B24-11S (2) N/MS3057-16A (3) MS06B24-11S-16	(1) N/MS3108B24-11S (2) N/MS3057-16A (3) MS08B24-11S-16	(1) JL04V-6A24-11SE-EB-R (2) JL04-2428CK(11)-RK (3) 332706X10	(1) JL04V-8A24-11SE-EBH-RK (2) JL04-2428CK(11)-RK (3) 332707X10		
180 sq.	R2CA18350L R2CA18350D R2CA18450H R2CA18550R R2CA18550H	(1) N/MS3106B24-11S (2) N/MS3057-16A (3) MS06B24-11S-16	(1) N/MS3108B24-11S (2) N/MS3057-16A (3) MS08B24-11S-16	(1) JL04V-6A24-11SE-EB-R (2) JL04-2428CK(17)-R (3) 332706X10	(1) JL04V-8A24-11SE-EBH-RK (2) JL04-2428CK(17)-R (3) 332707X10	Covered by the power connector on the left	
	R2CA18750H	(1) N/MS3106B32-17S (2) N/MS3057-20A (3) MS06B32-17S-20	(1) N/MS3108B32-17S (2) N/MS3057-20A (3) MS08B32-17S-20	(1) JL04V-6A32-17SE-EB-RK (Conduit) (3) JL04V-6A32-17SE	–	(1) JL04V-6A10SL-3SE-EB-R (2) JL04-1012CK(05)-R (3) 332706X1	(1) JL04V-8A10SL-3SE-EBH-R (2) JL04-1012CK(05)-R (3) 332707X1
220 sq.	R2CA2211KB R2CA2215KV						
	R2CA2220KV	Terminal block type (Plugs are not compatible)					
275 sq.	R2CA2830KV	Terminal block type (Plugs are not compatible)					
320 sq.	R2CA3255KB	Terminal block type (Plugs are not compatible)				–	
100 sq.	R1CA10150V R1CA10200V	(1) N/MS3106B20-15S (2) N/MS3057-12A (3) MS06B20-15S-12	(1) N/MS3108B20-15S (2) N/MS3057-12A (3) MS08B20-15S-12	(1) JL04V-6A20-15SE-EB-RK (2) JL04-2022CK(12)-R (3) 332706X5	(1) JL04V-8A20-15SE-EBH-RK (2) JL04-2022CK(12)-R (3) 332707X5	Covered by the power connector on the left	
130 sq.	R1CA13300V	(1) N/MS3106B24-11S (2) N/MS3057-16A (3) MS06B24-11S-16	(1) JL04V-8A24-11SE-EBH-RK (2) JL04-2428CK(11)-RK (3) 332707X10	(1) JL04V-6A24-11SE-EB-R (2) JL04-2428CK(11)-RK (3) 332706X10	(1) JL04V-8A24-11SE-EBH-RK (2) JL04-2428CK(11)-RK (3) 332707X10	Covered by the power connector on the left	
180 sq.	R1CA18550H R1CA18750L R1CA1811KR R1CA1815KB	(1) N/MS3106B32-17S (2) N/MS3057-20A (3) MS06B32-17S-20	(1) N/MS3108B32-17S (2) N/MS3057-20A (3) MS08B32-17S-20	(1) JL04V-6A32-17SE-EB-RK (Conduit) (3) JL04V-6A32-17SE	–	(1) JL04V-6A10SL-3SE-EB-R (2) JL04-1012CK(05)-R (3) 332706X1	(1) JL04V-8A10SL-3SE-EBH-R (2) JL04-1012CK(05)-R (3) 332707X1
220 sq.	R1CA2220KV	Terminal block type (Plugs are not compatible)				–	

Note 1: See the catalogs and instruction manuals issued by the connector manufacturer (Japan Aviation Electronics Industry Limited) for how to handle the items and precautions.

Note 2: The conduit is to be provided by the customer.

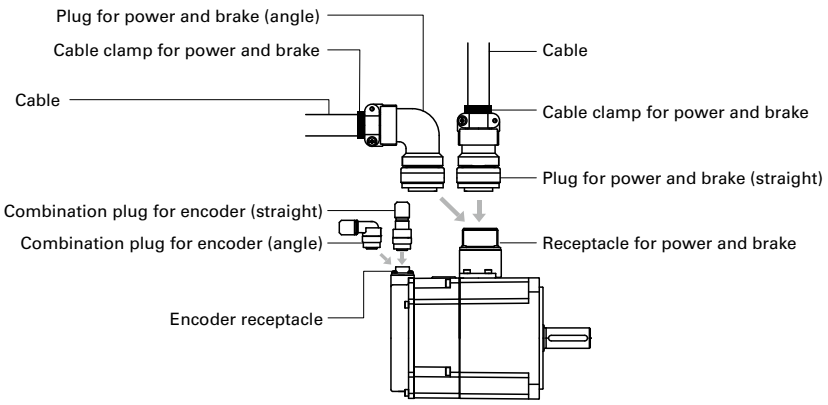

Manufacturer: Japan Aviation Electronics Industry, Ltd.

Flange size [mm]	Motor model no.	Pin assignment					Compatible amplifier capacity	Recommended motor power cable size (U, V, W, and ground)		Main power supply cable size (R, S, T, and ground)	
		U phase	V phase	W phase	Ground	Brake		mm^2	AWG No.	mm^2	AWG No.
100 sq.	R2CA10075F	A	B	C	D	E, F	25 A	1.25	#16	1.25	#16
	R2CA10100F						50 A	2	#14	2	#14
130 sq.	R2CA13050D	D	E	F	G, H	A, B	25 A	1.25	#16	1.25	#16
	R2CA13120R										
	R2CA13120F						50 A	2	#14	2	#14
	R2CA13180H						25 A	1.25	#16	1.25	#16
	R2CA13180D						50 A	2	#14	2	#14
	R2CA13200L						25 A	1.25	#16	1.25	#16
	R2CA13200H						50 A	2	#14	2	#14
180 sq.	R2CA18350L	D	E	F	G, H	A, B	50 A	2	#14	2	#14
	R2CA18350D						100 A	3.5	#12	2	#14
	R2CA18450H										
	R2CA18550R										
	R2CA18550H						150 A	5.5	#10	5.5	#10
	R2CA18750H	A	B	C	D	A, B*					
220 sq.	R2CA2211KB						150 A	8	#8	5.5	#10
	R2CA2215KV										
	R2CA2220KV	Terminal block				A, B*	300 A	14	#6	14	#6
275 sq.	R2CA2830KV	Terminal block					300 A	14	#6	14	#6
320 sq.	R2CA3255KB	Terminal block				No	800 A	22	#4	60	#2/0
100 sq.	R1CA10150V	A	B	C	D	E, F	25 A	1.25	#16	1.25	#16
	R1CA10200V						50 A	2	#14	2	#14
130 sq.	R1CA13300V	D	E	F	G, H	A, B	50 A	2	#14	2	#14
180 sq.	R1CA18550H	A	B	C	D	A, B*	150 A	8	#8	5.5	#10
	R1CA18750L										
	R1CA1811KR										
	R1CA1815KB										
220 sq.	R1CA2220KV	Terminal block				–	300 A	14	#6	14	#6

*For R2CA18750, R2CA22 □□ , and R1CA18 □□ , the brake connectors are separate from the power connectors.

Encoder/Thermostat Connectors

Encoder connectors

Motor flange size	Encoder combination plug model no. (with rubber bushing)		Encoder receptacle model no. (Motor side)	Compatible cable diameter (Bushing color)	Pin assignment	Remarks
	Straight	Angled				
R1: 100 to 220 mm sq. R2: 100 to 220 mm sq.	JN2DS10SL1-R	JN2FS10SL1-R	JN2AS10ML2-R	ø5.7 to 7.3 mm (Black)	See the encoder wiring diagram of individual servo amplifiers.	Japan Aviation Electronics Industry, Ltd.
	JN2DS10SL2-R	JN2FS10SL2-R		ø6.5 to 8.0 mm (Gray)		
	JN2DS10SL3-R	JN2FS10SL3-R		ø3.5 to 5.0 mm (Brick red)		

Motor flange size	Connector model no.	Encoder receptacle model no. (Motor side)	Compatible cable diameter (Bushing color)	Pin assignment	Remarks
	Mfr. part no. (Order no. in parentheses)				
R2: 275 to 320 mm sq.	5557-10R (AL-00082504-15)	5559-10P	–	See the encoder wiring diagram of individual servo amplifiers.	Molex Japan Co., Ltd.

Note: Select the correct plug and contact for the cable size you use.

Encoder plug contacts

Motor flange size	Contact size	Classification	Applicable socket contact		Remarks
			Socket contact model no.	Compatible wiring size	
R1: 100 to 220 mm sq. R2: 100 to 220 mm sq.	#22	Manual crimping tool type	JN1-22-20S-R-PKG100	AWG20	Japan Aviation Electronics Industry, Ltd.
			JN1-22-22S-PKG100	AWG21 to 25	
			JN1-22-26S-PKG100	AWG26 to 28	
		Soldering type	JN1-22-22F-PKG100	AWG20	

Motor flange size	Contact size	Classification	Applicable socket contact		Remarks
			Mfr. part no. (Order no. in parentheses)	Compatible wiring size	
R2: 275 to 320 mm sq.	#28	Manual crimping tool type	5556T2L (AL-00171350-01)	AWG 22 to 28	Molex Japan Co., Ltd.
			5556GS2L7F (AL-00599690-04)		

Note 1: Select the correct plug and contact for the cable size you use.
Note 2: When removing an inserted contact, use a removal tool. Prepare a commercially available removal tool bu yourself.
Note 3: For the part number of manual crimp tools, see the instruction manual issued by the respective manufacturers.
Note 4: For a semi-automatic crimp tool, prepare a commercially available one.
Note 5: For safety and handling precautions with connectors and contacts, refer to catalogs and instruction manuals of the respective manufacturers.

Thermostat connectors

Motor flange size	Mfr. part no. (Order no. in parentheses)		Compatible wiring size	Remarks
	Connector	Contact		
R2: 275 to 320 mm sq.	5557-2R (AL-00082504-08)	5556T2L (AL-00171350-01)	AWG 22 to 28	Molex Japan Co., Ltd.

Cables

■ USB communication cable for setup software

Communication cable with computers for setup software use.

Cable length: L [m]	Model no.
1.0	AL-00896515-01
2.0	AL-00896515-02

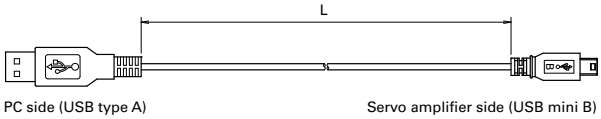

Specifications or the drawing are subject to change without notice.

■ Amplifier-amplifier cable for tandem operation

Connects between amplifiers for tandem operation. (CN5 ⇔ CN5)

Cable length: L [m]	Model no.
0.2	AL-00911582-01
3.0	AL-00911582-02

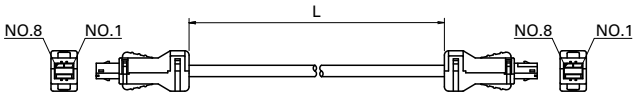

Note: These are dedicated for Analog/Pulse type amplifiers and cannot be used with EtherCAT type or built-in positioning type amplifiers.

■ Serial communication

Name	Description	Model no.	Cable length [m]
Controller-amplifier Modbus cable	For controller connection (SANMOTION C-amplifier connection)	AL-01101867-01	1
	For controller connection (SANMOTION C-amplifier connection)	AL-01101867-03	3
	For controller connection (SANMOTION C-amplifier connection)	AL-01101867-05	5
	For controller connection (SANMOTION C-amplifier connection)	AL-01101867-07	7
	For controller connection (SANMOTION C-amplifier connection)	AL-01101867-10	10
Amplifier-amplifier Modbus cable	For amplifier-amplifier connection	AL-01101866-01	0.2
	For amplifier-amplifier connection	AL-01101866-02	0.5
	For amplifier-amplifier connection	AL-01101866-03	1
	For amplifier-amplifier connection	AL-01101866-04	3
	For amplifier-amplifier connection	AL-01101866-05	5
	For amplifier-amplifier connection	AL-01101866-06	7
	For amplifier-amplifier connection	AL-01101866-07	10
Terminating connector	For terminating resistor connection	AL-01101864	–

■ Unit-to-unit cables

For 800 A amplifiers

Name	Description	Model no.
Copper bar	For main power connection between power supply unit and amplifier unit. Between terminals +DC and -DC. (5 mm clearance between units) Set of 2 pcs.	AL-01020858-01
Unit-to-unit connection cable (0.5 m)	Between power supply unit (CN10) and amplifier unit (CN10)	AL-01018354-01

Note: An amplifier-amplifier communication cable for the EtherCAT type is to be provided by the customer.

Servo Motor Power Cables

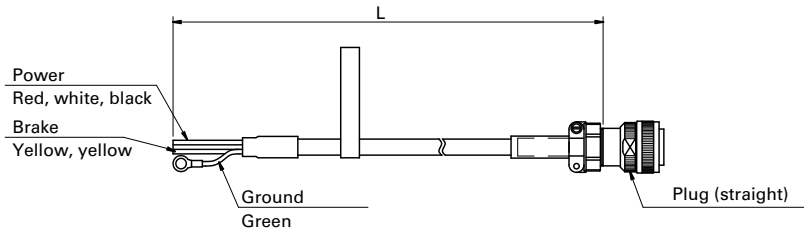

Connect power line to the servo amplifier's connector CNB.
Connect brake line to the servo amplifier's connector CNE.

This item is also listed in the Power Connector to Servo Motor Power Connectors and Wire Size table.
Only straight plugs are available for this cable.
Cables with angled plugs are not available.

For 100 mm sq. motors

Compatible motors: R2CA10075F, R2CA10100F, R1CA10150V, R1CA10200V

	Cable length L [m]	Power cable	Power/brake cable
Model no.	1	AL-00964811-01	AL-00964812-01
	2	AL-00964811-02	AL-00964812-02
	3	AL-00964811-03	AL-00964812-03
	5	AL-00964811-05	AL-00964812-05
	10	AL-00964811-10	AL-00964812-10
Plug		JL04V-6A20-15SE-EB-RK	

Connection

Pin no.	Lead wire color	Signal name
A	Red	U
B	White	V
C	Black	W
D	Green	Ground

Pin no.	Lead wire color	Signal name
A	Red	U
B	White	V
C	Black	W
D	Green	Ground
E	Yellow	Brake
F	Yellow	Brake

For 130 mm sq. motors

Compatible motors: R2CA13050D, R2CA13120R, R2CA13120F R2CA13180H, R2CA13200L, R2CA13200H, R1CA13300V

	Cable length L [m]	Power cable	Power/brake cable
Model no.	1	AL-00965739-01	AL-00965740-01
	2	AL-00965739-02	AL-00965740-02
	3	AL-00965739-03	AL-00965740-03
	5	AL-00965739-05	AL-00965740-05
	10	AL-00965739-10	AL-00965740-10
Plug		JL04V-6A24-11SE-EB-R	

Connection

Pin no.	Lead wire color	Signal name
D	Red	U
E	White	V
F	Black	W
G	Green	Ground

Pin no.	Lead wire color	Signal name
D	Red	U
E	White	V
F	Black	W
G	Green	Ground
A	Yellow	Brake
B	Yellow	Brake

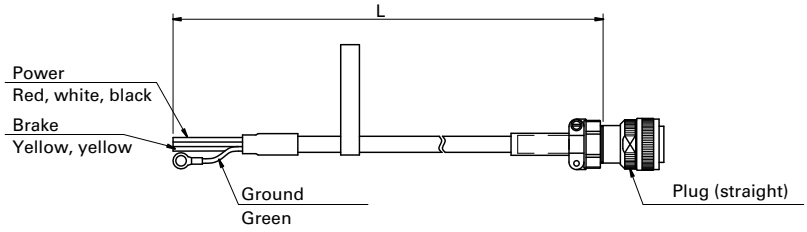

Connect power line to the servo amplifier's connector CNB.
Connect brake line to the servo amplifier's connector CNE.

This item is also listed in the Power Connector to Servo Motor Power Connectors and Wire Size table.
Only straight plugs are available for this cable.
Cables with angled plugs are not available.

For 130/180 mm sq. motors

Compatible motors: R2CA13180D, R2CA18350L

	Cable length L [m]	Power cable	Power/brake cable
Model no.	1	AL-00965741-01	AL-00965742-01
	2	AL-00965741-02	AL-00965742-02
	3	AL-00965741-03	AL-00965742-03
	5	AL-00965741-05	AL-00965742-05
	10	AL-00965741-10	AL-00965742-10
Plug		JL04V-6A24-11SE-EB-R	

Connection

Pin no.	Lead wire color	Signal name
D	Red	U
E	White	V
F	Black	W
G	Green	Ground

Pin no.	Lead wire color	Signal name
D	Red	U
E	White	V
F	Black	W
G	Green	Ground
A	Yellow	Brake
B	Yellow	Brake

For 180 mm sq. motors

Compatible motors: R2CA18350D, R2CA18450H, R2CA18550R

	Cable length L [m]	Power cable	Power/brake cable
Model no.	1	AL-00965743-01	AL-00965744-01
	2	AL-00965743-02	AL-00965744-02
	3	AL-00965743-03	AL-00965744-03
	5	AL-00965743-05	AL-00965744-05
	10	AL-00965743-10	AL-00965744-10
Plug		JL04V-6A24-11SE-EB-R	

Connection

Pin no.	Lead wire color	Signal name
D	Red	U
E	White	V
F	Black	W
G	Green	Ground

Pin no.	Lead wire color	Signal name
D	Red	U
E	White	V
F	Black	W
G	Green	Ground
A	Yellow	Brake
B	Yellow	Brake

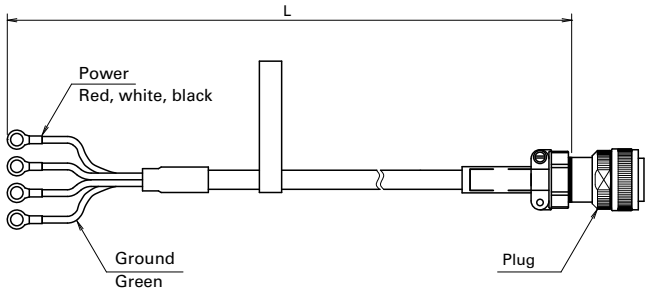

For 180 mm sq. motors

Compatible motors: R2CA18550H

	Cable length L [m]	Power cable
Model no.	1	AL-00997919-01
	2	AL-00997919-02
	3	AL-00997919-03
	5	AL-00997919-05
	10	AL-00997919-10
Plug		JL04V-6A24-11SE-EB-R
Connection		

Pin no.	Lead wire color	Signal name
D	Red	U
E	White	V
F	Black	W
G	Green	Ground

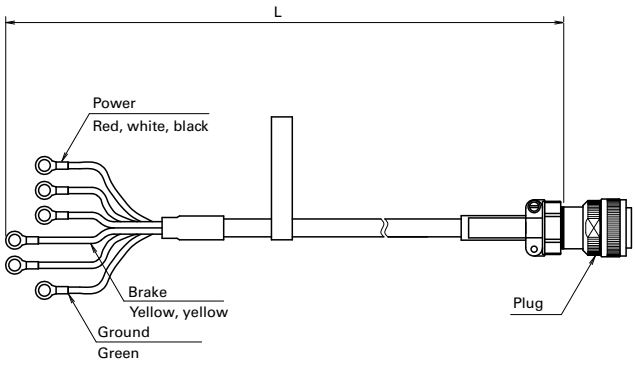

For 180 mm sq. motors

Compatible motors: R2CA18550H

	Cable length L [m]	Power/brake cable
Model no.	1	AL-00997920-01
	2	AL-00997920-02
	3	AL-00997920-03
	5	AL-00997920-05
	10	AL-00997920-10
Plug		JL04V-6A24-11SE-EB-R
Connection		

Pin no.	Lead wire color	Signal name
D	Red	U
E	White	V
F	Black	W
G	Green	Ground
A	Yellow	Brake
B	Yellow	Brake

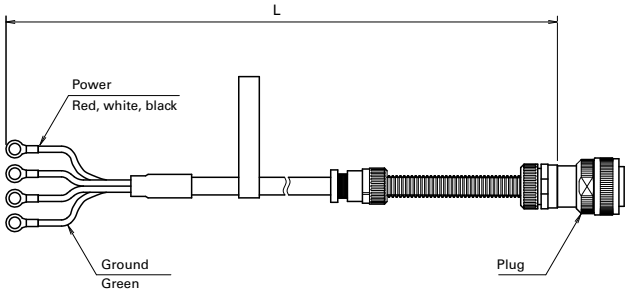

For 180/220 mm sq. motors

Compatible motors: R2CA18750H, R2CA2211KB, R2CA2215KV, R1CA18550H, R1CA18750L, R1CA1811KR, R1CA1815KB

	Cable length L [m]	Power cable
Model no.	1	AL-00997921-01
	2	AL-00997921-02
	3	AL-00997921-03
	5	AL-00997921-05
	10	AL-00997921-10
Plug		JL04V-6A32-17SE-EB-RK
Connection		

Pin no.	Lead wire color	Signal name
A	Red	U
B	White	V
C	Black	W
D	Green	Ground

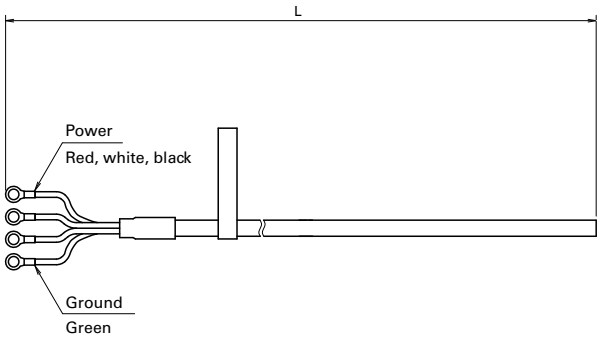

For 220/275 mm sq. motors

Compatible motors: R2CA2220KV, R2CA2830KV, R1CA2220KV

	Cable length L [m]	Power cable
Model no.	1	AL-00999240-01
	2	AL-00999240-02
	3	AL-00999240-03
	5	AL-00999240-05
	10	AL-00999240-10
Connection		

Lead wire color	Signal name
Red	U
White	V
Black	W
Green	Ground

Cables

■ Servo motor encoder cables

Compatible motors: Other than R2CA2830KV, R2CA3255KB, for analog/pulse type servo amplifiers

Cable length: L [m]	Model no.
1	AL-00937694-01
2	AL-00937694-02
3	AL-00937694-03
5	AL-00937694-05
10	AL-00937694-10

Note: Only straight plugs are available for this cable.
Cables with angled plugs are not available.

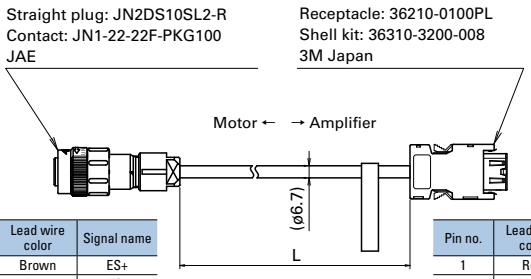

Pin no.	Lead wire color	Signal name
1	Brown	ES+
2	Blue	ES-
4	Purple	EBAT-
8	Green	EBAT+
9	Red	5 V
10	Black	0 V
7	Shielded	Ground

Pin no.	Lead wire color	Signal name
1	Red	5 V
2	Black	0 V
7	Brown	ES+
8	Blue	ES-
9	Green	EBAT-
10	Purple	EBAT+

Compatible motors: Other than R2CA2830KV, R2CA3255KB, for EtherCAT and built-in positioning type servo amplifiers

Cable length: L [m]	Model no.
1	RS-CA9-01-R
2	RS-CA9-02-R
3	RS-CA9-03-R
5	RS-CA9-05-R
10	RS-CA9-10-R

Note: Only straight plugs are available for this cable.
Cables with angled plugs are not available.

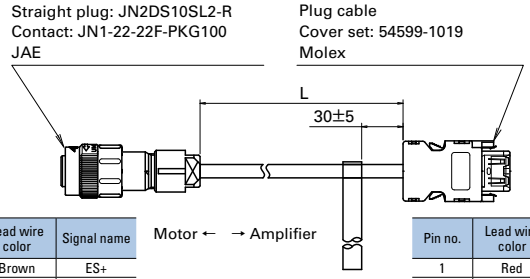

Pin no.	Lead wire color	Signal name
1	Brown	ES+
2	Blue	ES-
4	Purple	EBAT-
8	Green	EBAT+
9	Red	5 V
10	Black	0 V
7	Shielded	Ground

Pin no.	Lead wire color	Signal name
1	Red	5 V
2	Black	0 V
7	Brown	ES+
8	Blue	ES-
9	Green	EBAT-
10	Purple	EBAT+

Compatible motors: R2CA2830KV, R2CA3255KB for analog/pulse type servo amplifiers

Cable length: L [m]	Model no.
1	AL-00999243-01
2	AL-00999243-02
3	AL-00999243-03
5	AL-00999243-05
10	AL-00999243-10

Note: Cables with a plug on the motor side are not available. Such a cable is to be prepared by the customer.

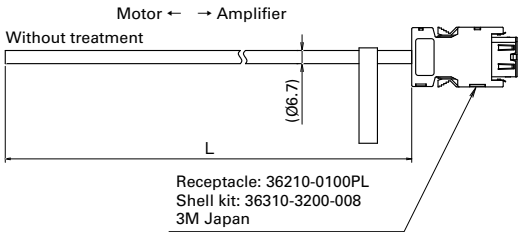

Pin no.	Lead wire color	Signal name
1	Red	5 V
2	Black	0 V
7	Brown	ES+
8	Blue	ES-
9	Green	EBAT+
10	Purple	EBAT-

Compatible motors: R2CA2830KV, R2CA3255KB for EtherCAT and built-in positioning type servo amplifiers

Cable length: L [m]	Model no.
1	RS-CA10-01-R
2	RS-CA10-02-R
3	RS-CA10-03-R
5	RS-CA10-05-R
10	RS-CA10-10-R

Note: Cables with a plug on the motor side are not available. Such a cable is to be prepared by the customer.

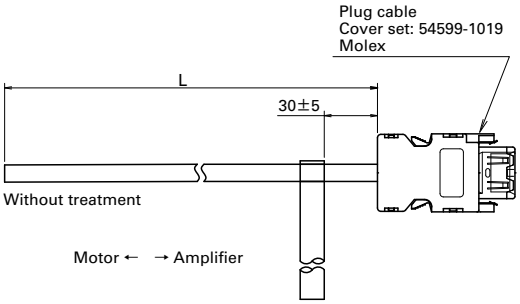

Pin no.	Lead wire color	Signal name
1	Red	5 V
2	Black	0 V
7	Brown	ES+
8	Blue	ES-
9	Green	EBAT+
10	Purple	EBAT-

■ Servo motor cooling fan power cables

Compatible motors: R1CA18550H, R1CA18750L, R1CA1811KR, R1CA1815KB, R1CA2220KV

Cable length: L [m]	Model no.
1	AL-00997923-01
2	AL-00997923-02
3	AL-00997923-03
5	AL-00997923-05
10	AL-00997923-10

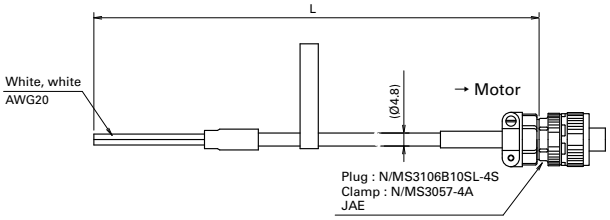

Compatible motors: R2CA2830KV

Cable length: L [m]	Model no.
1	AL-00999241-01
2	AL-00999241-02
3	AL-00999241-03
5	AL-00999241-05
10	AL-00999241-10

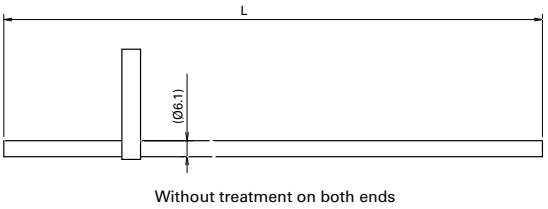

■ Servo motor brake cables

Compatible motors: R2CA18750H, R2CA2211KB, R2CA2215KV, R2CA2220KV
R1CA18550H, R1CA18750L
R1CA1811KR, R1CA1815KB

Cable length: L [m]	Model no.
1	AL-00918630-01
2	AL-00918630-02
3	AL-00918630-03
5	AL-00918630-05
10	AL-00918630-10

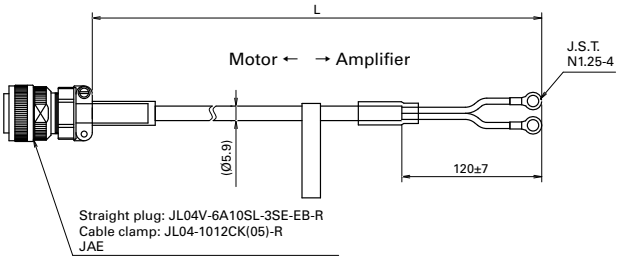

Compatible motors: R2CA2830KV

Cable length: L [m]	Model no.
1	AL-00999239-01
2	AL-00999239-02
3	AL-00999239-03
5	AL-00999239-05
10	AL-00999239-10

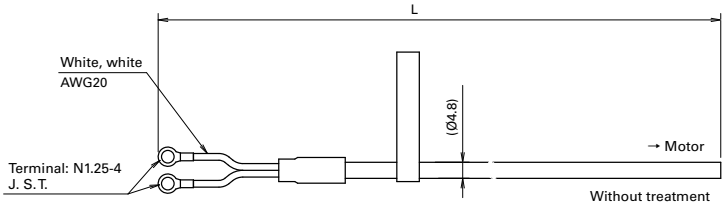

■ Servo motor cooling fan thermostat cables

Compatible motors: R2CA2830KV

Cable length: L [m]	Model no.
2	AL-00999242-02
3	AL-00999242-03
5	AL-00999242-05
10	AL-00999242-10

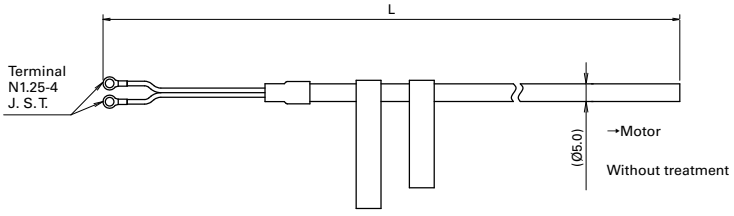

AC Reactors

It is recommended you install an AC reactor to the power supply input to suppress harmonic currents and correct the power factor

Model no.	Compatible servo amplifier	Dimensions [Unit: mm]								Terminal size	Mass [kg]
		W	W1	W2	H	D	D1	D2	d		
R-ACL-02KC	RS3C02□	120	90	70	150	70	72	50	5	M4	2.5
R-ACL-05KC	RS3C05□	150	120	100	175	80	92	70	5	M4	5.0
R-ACL-15KC	RS3C10□ RS3C15□	205	154	95	210	120	138	115	6	M5	13.0
R-ACL-30KC	RS3C30□	260	260	125	245	155	145	100	8	M6	19.0
R-ACL-75KC	RS3D80□	300	250	130	330	205	150	115	10	M8	40.0

Note: Connect an AC reactor to each servo amplifier

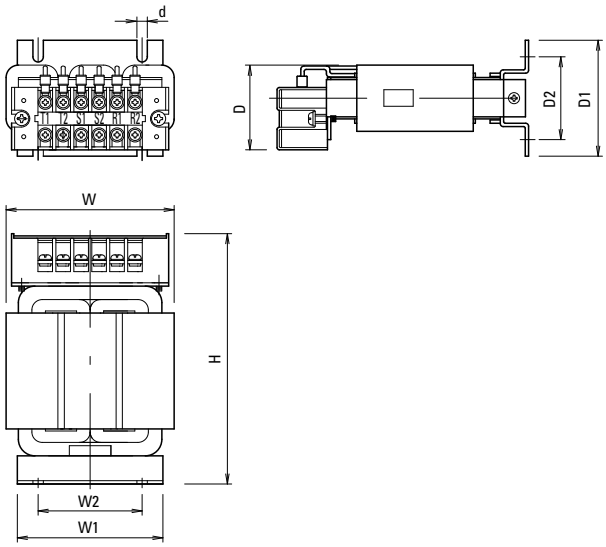

Analog Monitor (Unit: mm)

This is an analog monitor that can display velocity waveforms on an oscilloscope for the purpose of system tuning or maintenance.

Name	Description	Model no.
1) Analog monitor box	Monitor box main unit 2 pcs of dedicated cables	Q-MON-3
2) Dedicated cable	1 pc of dedicated cable	AL-00690525-01

1) Monitor box (Model no.: Q-MON-3)

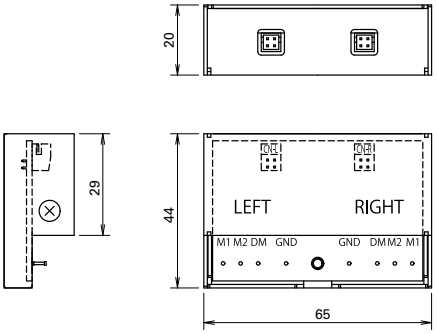

2) Dedicated cable (Model no.: AL-00690525-01)

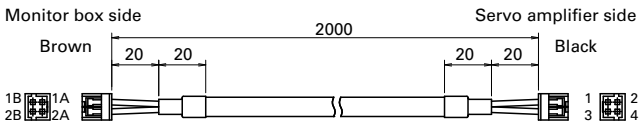

Note 1: Two pieces of the dedicated cable 2) above (AL-00690525-01) are included with the analog monitor box (Q-MON-3).
Note 2: Power is supplied by the servo amplifier.

External Regenerative Resistor (Unit: mm)

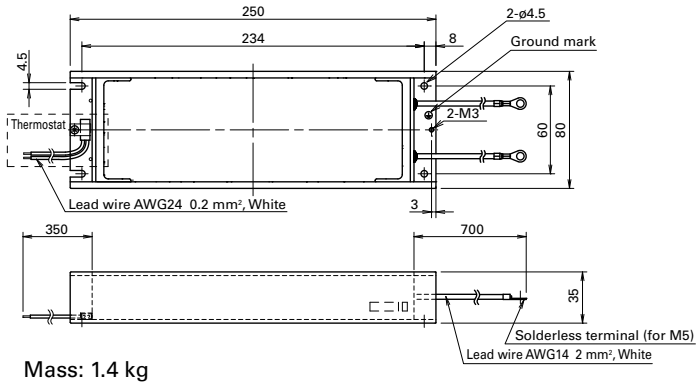

Mass: 1.4 kg

Model no.	Rated power [P_R]	Resistance	Thermostat
REGIST-500CW80B	500 W	80 Ω	Normally closed
REGIST-500CW40B	500 W	40 Ω	Normally closed
REGIST-500CW20B	500 W	20 Ω	Normally closed
REGIST-500CW14B	500 W	14 Ω	Normally closed
REGIST-500CW7B	500 W	7 Ω	Normally closed

Thermostat detection temperature: 100 ± 5°C

Front Mounting Brackets (Unit: mm)

This is a pair of metal brackets for mounting a 25 A servo amplifier on the front face (the face with connectors).
50 and 100 A models can be mounted on the front face too by removing the attached back-mounting brackets from the amplifier and using them for front-mounting.

Compatible servo amplifier	Model no.	Set items
25 A (RS3C02)	AL-00962547-01	Upper and lower mounting brackets: 1 each Fastening screws: 6pcs

Upper/Lower brackets shares one drawing

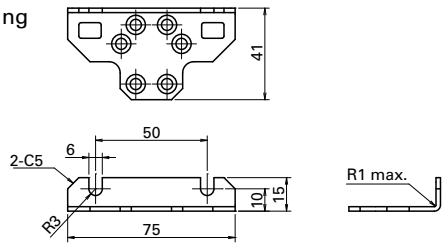

Selection of Servo Motor Output (Rotary Motors)

This is a calculation method for deriving required servo motor output based on specifications of machines.
In this instance an introduction on the procedure for the selection is provided primarily for instances where ball screw (horizontal) mechanism is involved.

Selection steps

1. Determine the motion profile

Determine the mechanism to use and the motion profile.

2. Calculate the axial load moment of inertia, J_L

Calculate the load moment of inertia about the motor axis based on the mechanism.

3. Calculate the moment of inertia of the motor's load, T_L

Calculate the load torque for the mechanism to use.

4. Provisional selection of servo motor output

Provisionally select a motor that meets the following conditions: the load moment of inertia (J_L) is 10 times or below the motor's rotor moment of inertia (J_M), and the load torque (T_L) is 80% or below ($T_R \times 0.8$) the motor's rated torque (T_R).
$J_L \leq J_M \times 10$
$T_L \leq T_R \times 0.8$

5. Calculate the acceleration/deceleration torque

Calculate the total torque required to accelerate/decelerate the system (motor and load) based on the motion profile.

6. Calculate actual torque

Calculate the required actual torque using a formula and the results of the previous steps.

7. Assessment

Check if the calculated acceleration and deceleration torques (T_a and T_b) are 80% or below the selected motor's peak torque at stall ($\leq T_p \times 0.8$) and the calculated actual torque (T_{rms}) is 80% or below the motor's rated torque ($\leq T_R \times 0.8$).
$T_a \leq T_p \times 0.8$
$T_b \leq T_p \times 0.8$
$T_{rms} \leq T_R \times 0.8$
If the selected motor does not meet the conditions above, then change the servo motor output and try one with a larger output.

8. Calculate the regenerative power

Calculate the regenerative power and select an external regenerative resistor if needed.

1. Determine the motion profile

First, determine the machine mechanism and required parameters such as the dimensions of components, positioning resolution, positioning time, and gear ratio. Make a motion profile for the determined drive in a graph with speed and time axes.

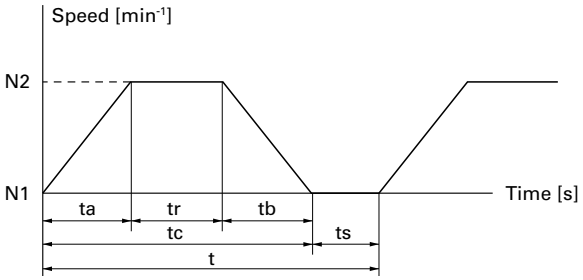

N_1: Servo motor rotational speed before acceleration [min^{-1}]
N_2: Servo motor rotational speed after acceleration [min^{-1}]
t_a = Time spent accelerating the load [s]
t_b = Time spent decelerating the load [s]
t_r = Time spent while motor is turning at constant speed [s]
t_s = Time spent while motor is at rest [s]
t = 1 cycle [s]

2. Calculate the axial load moment of inertia, J_L

Load moment of inertia is the quantity that expresses an object's resistance to change its state of rotational motion.
The following formula is for calculating it in the case of a (horizontal) ball screw mechanism.

■ Moment of inertia of ball screw

$$J_{L1} = \left(\frac{1}{G}\right)^2 \times \frac{\pi \times \rho \times D^4 \times L}{32} \quad [kg \cdot m^2]$$

G: Gear ratio
ρ : Ball screw density [kg/m^3] (Iron: 7.8×10^3)
D: Ball screw diameter [m]
L: Ball screw length [m]

■ Moments of inertia of workpiece and table

$$J_{L2} = \left(\frac{1}{G}\right)^2 \times W \times \left(\frac{P}{2\pi}\right)^2 \quad [kg \cdot m^2]$$

G: Gear ratio
W: Workpiece mass + table mass [kg]
P: Ball screw pitch [m]

■ Axial load moment of inertia

$J_L = J_{L1} + J_{L2}$

Note: The moments of inertia of the reduction gear and coupling are assumed to be small enough to be negligible

3. Calculate the axial load torque, T_L

The formula for load torque converts forces exerted on the load due to friction and gravity into the rotational equivalent as reflected to the motor shaft by the lead screw. This is the torque against which a motor works against to drive the load.
The following formula is for calculating it in the case of a (horizontal) ball screw mechanism.

$$T_L = \frac{F + \mu W \times 9.8}{\eta} \times \frac{P}{2\pi} \times \frac{1}{G} \quad [N \cdot m]$$

F: External force [N]
η : Mechanical efficiency
μ : Friction coefficient
W: Workpiece mass + table mass [kg]
P: Ball screw lead [m]
G: Gear ratio

Selection of Servo Motor Output (Rotary Motors)

4. Provisional selection of servo motor output

Provisionally, select motors that satisfy the following 2 conditions.

- The load moment of inertia (J_L) calculated in step 2 is 10 times or below the motor's rotor moment of inertia ($J_M \times 10$)
  $J_L \leq J_M \times 10$
- The load torque (T_L) calculated in step 3 is 80% or below the rated torque ($T_R \times 0.8$) of the motor
  $T_L \leq T_R \times 0.8$

5. Calculate the acceleration/deceleration torque

The acceleration/deceleration torque is the torque required to accelerate or decelerate the motor and load.

■ How to calculate acceleration torque (T_a)

$$T_a = \frac{2\pi (N_2 - N_1) \times (J_L + J_M)}{60 \times ta} + T_L \quad [N \cdot m]$$

N_2: Servo motor rotating speed after acceleration [min^{-1}]
N_1: Servo motor rotating speed before acceleration [min^{-1}]
J_L: Load moment of inertia about the motor axis [$kg \cdot m^2$]
J_M: Servo motor rotor moment of inertia [$kg \cdot m^2$]
T_L: Axial load torque [N·m]
t_a = Acceleration time [s]

■ Deriving deceleration torque (T_b)

$$T_b = \frac{2\pi (N_2 - N_1) \times (J_L + J_M)}{60 \times tb} - T_L \quad [N \cdot m]$$

N_2: Servo motor rotating speed before acceleration [min^{-1}]
N_1: Servo motor rotating speed after acceleration [min^{-1}]
J_L: Load moment of inertia about the motor axis [$kg \cdot m^2$]
J_M: Servo motor rotor moment of inertia [$kg \cdot m^2$]
T_L: Axial load torque [N·m]
t_b = Deceleration time [s]

6. Calculate actual torque

The actual torque is a root mean square of the load torque, acceleration torque, and deceleration torque.

$$Trms = \sqrt{\frac{(T_a^2 \times ta) + (T_L^2 \times tr) + (T_b^2 \times tb)}{t}} \quad [N \cdot m]$$

7. Assessment

We use the following conditions for assessment.

- Required load torque: $T_L \leq T_R \times 0.8$
  (Load torque ≤ 80% of the rated torque)

- Required torque at acceleration: $T_a \leq T_P \times 0.8$
  (Acceleration torque ≤ 80% of the peak torque at stall)
  T_P: Peak torque at stall

- Required torque at deceleration: $T_b \leq T_P \times 0.8$
  (Deceleration torque ≤ 80% of the peak torque at stall)
  T_P: Peak torque at stall

- Required actual torque: $T_{rms} \leq T_R \times 0.8$
  (Actual torque ≤ 80% of the rated torque)

- Required moment of inertia: $J_L \leq J_M \times 10$
  (Load moment of inertial ≥ 10 times or below the motor rotor moment of inertial)

Rise in motor temperature can be suppressed by calculating the required torque with a larger safety margin. The moment of inertia ratio can be more than 10 times, for example, for mechanisms that slowly rotate a table. We recommend that you conduct verifications using actual machines.

8. Calculate the regenerative power

Calculate the effective regenerative power (P_M) to determine the type of suitable regenerative resistor to be used. The result of this calculation determines if a built-in regenerative resistor can be used or an external one is required.

■ How to calculate effective regenerative power (P_M) of horizontal shaft drive

First, calculate the regenerative energy.

$$E_M = E_{hb} = \frac{1}{2} \times N \times 3 \times K_{e\phi} \times \frac{Tb}{K_T} \times t_b - \left(\frac{Tb}{K_T}\right)^2 \times 3 \times R_\phi \times t_b$$

E_M: Regenerative energy during horizontal driving [J]
E_{hb}: Regenerative energy during deceleration [J]
$K_{e\phi}$: Phase voltage constant [V_{rms}/min^{-1}] (motor constant)
K_T: Torque constant [$N \cdot m/A_{rms}$] (motor constant)
N: Motor speed [min^{-1}]
R_ϕ: Phase resistance [Ω] (motor constant)
t_b: Deceleration time [s]
T_b: Torque from deceleration [N·m]

Calculate the regenerative power from regenerative energy.

$$P_M = \frac{E_M}{t}$$

P_M: Regenerative power [W]
E_M: Regenerative energy [J]
t: Cycle time [s]

■ Selection of regenerative resistor

Select a regenerative resistor that satisfies the following conditions.

- Servo amplifier's built-in regenerative resistor
  Required regenerative power [P_M] < Maximum regenerative power that can be handled by a built-in regenerative resistor [P_R]
- External regenerative resistor
  Required regenerative power [P_M] < Maximum regenerative power that can be handled by an external regenerative resistor [P_{RO}]

Note that our servo amplifiers either come with or without built-in regenerative resistors for absorbing regenerative power. Make a selection carefully.

Selection Materials by Mechanism

Typical mechanism examples and required selection criteria are shown below. Provide us with these information when consulting us for selection.

Ball Screw

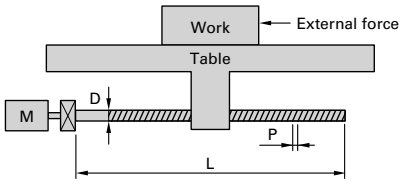

External force	F	N
Workpiece mass + table mass	W	kg
Ball screw diameter	D	m
Ball screw length	L	m
Ball screw pitch	P	m
Ball screw material density	ρ	kg/m^3
Friction coefficient	μ	
Gear ratio*	G	
Mechanical efficiency	η	

Rack & Pinion

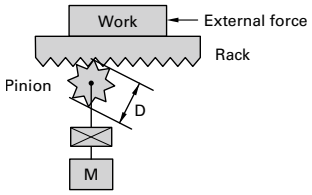

External force	F	N
Workpiece mass + rack mass	W	kg
Pinion diameter	D	m
Pinion thickness	L	m
Pinion material density	ρ	kg/m^3
Friction coefficient	μ	
Gear ratio*	G	
Mechanical efficiency	η	

Belt drive

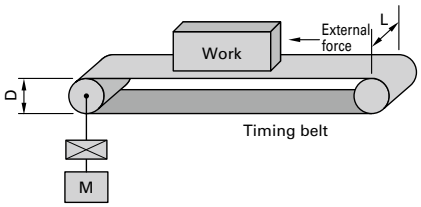

External force	F	N
Workpiece mass + belt mass	W	kg
Pulley diameter	D	m
Pulley width	L	m
Pulley material density	ρ	kg/m^3
Gear ratio*	G	
Mechanical efficiency	η	

Roll feed

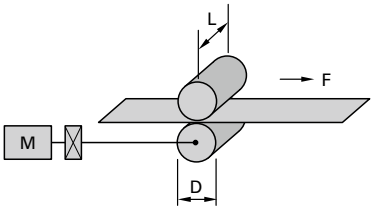

Sheet tension	F	N
Roll diameter	D	m
Roll width	L	m
Roll material density	ρ	kg/m^3
Gear ratio*	G	
Mechanical efficiency	η	

Rotary indexing table

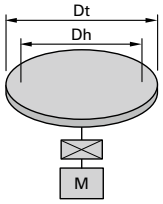

Table mass	W	kg
Table diameter	Dt	m
Table support diameter	Dh	m
Friction coefficient of table support	μ	
Gear ratio*	G	
Mechanical efficiency	η	

* Calculation of gear ratio (G)

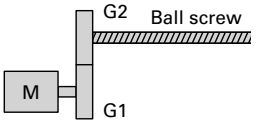

$$G = \frac{\text{Number of screw threads (G2)}}{\text{Number of motor gear teeth (G1)}}$$

Motor Protection Rating

The protection ratings of our servo motors comply with IEC standards (IEC 60034-5).
The standard states that the liquid used for testing should be fresh (pure) water, and liquids other than water such as oil are not included in the test conditions.

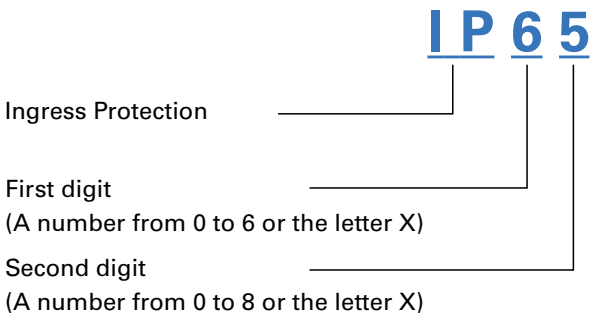

The degree of protection (IP code) is defined by IEC (International Electrotechnical Commission) 60529 "Degrees of Protection Provided by Enclosures (IP Code)"
(IEC 60529)

First digit	Description	Definition
0	No protection	–
1	Protection against solid objects > 50 mm	A spherical 50 mm diameter solid probe shall not completely penetrate
2	Protection against solid objects > 12.5 mm	A spherical 12.5 mm diameter solid probe shall not completely penetrate
3	Protection against solid objects > 2.5 mm	A spherical 2.5 mm diameter solid probe shall not penetrate at all
4	Protection against solid objects > 1 mm	A spherical 1 mm diameter solid probe shall not penetrate at all
5	Protection against a level of dust that could hinder operation or impair safety	Although it is impossible to completely prevent the penetration of dust, there should be no intrusion of an amount of dust that could impede the prescribed operation and safety of the electrical equipment
6	Complete protection against dust	Completely protected against dust

Second digit	Description	Definition
0	No protection	–
1	Protected against vertically falling drops of water	Vertically dripping water shall have no harmful effect.
2	Protected against vertically falling drops of water even if inclined up to 15°	Vertically dripping water shall have no harmful effect when the enclosure is tilted at an angle up to 15° from the vertical.
3	Protected against spraying water	Water falling as a spray at any angle up to 60° from the vertical shall have no harmful effect.
4	Protected against splashing water	Water splashing against the enclosure from any direction shall have no harmful effect.
5	Protected against water jets	Water projected by a nozzle against enclosure from any direction shall have no harmful effects.
6	Protected against powerful water jets	Water projected in powerful jets against the enclosure from any direction shall have no harmful effects.
7	Protected against temporary immersion in water	Ingress of water in harmful quantity shall not be possible when the enclosure is immersed in water under defined conditions of pressure and time.
8	Protected against submersion in water	The equipment is suitable for continuous immersion in water under conditions which shall be specified by the manufacturer. The test conditions are expected to be greater than the depth requirements for IPx7, and other environmental effects may be added.

Note 1: The standard states that the liquid used for testing should be fresh (pure) water, and liquids other than water such as oil are not included in the test conditions. Separate evaluation is necessary when used in environments subjected to non-water liquids, e.g., where machine tool cutting oil is present. Our servo motors have a proven track record of optional customization for machine tool applications, so please contact us as necessary.

Note 2: The ratings for water ingress (second digit) are not cumulative beyond IPX6. A device that is compliant with IPX7 (covering immersion in water) is not necessarily compliant with IPX5 or IPX6 (covering exposure to water jets). Select a protection rating suitable for your environment.

Safety Precautions

The products featured in this catalog are designed for use with general industrial machinery.
Pay sufficient attention to the following.

- Read the included Instruction Manual carefully before installing, assembling, and using the product for proper use. The Instruction Manual is available for download from our website.
- Refrain from modifying or processing the product in any way.
- Contact your point of sale or a properly licensed technician for installation or maintenance service of the product.
- Consult us when using the product for the following uses, as these require special considerations for operations, maintenance, and management such as redundancy and emergency power generators.
  - ❶ Use in medical equipment or other devices that may directly affect people' s lives or cause bodily injury
  - ❷ Use in transportation systems or transport-related equipment such as trains or elevators, that may affect people' s lives or cause bodily injury
  - ❸ Use in computer systems that have a major impact on society or on the public
  - ❹ Use in other devices that have a significant impact on human safety or on maintaining public operations

Consult us when using the product in an environment where vibrations occur, such as in a moving vehicle or during transportation.
Use the product only after becoming thoroughly proficient with relevant product knowledge, safety information, and precautions.

Warning Labels on Products

Products bear the following Warning Labels to indicate the situations as below, depending on the model.



This label is attached in the vicinity of high-voltage portions such as charging or cover-protected parts, to indicate locations with risk of electric shock.



This label is attached in the vicinity of grounding terminals to indicate that grounding is required.

Safety Alert Symbols

The following safety symbols are used in the manual to indicate different hazardous situations and prohibited or required actions.

DANGER Indicates immediate hazards that will cause severe bodily injury or death as a result of failure to follow the instructions.

WARNING Indicates hazards that could cause severe bodily injury or death as a result of failure to follow the instructions.

CAUTION Indicates possible hazards that could cause moderate bodily injury or only property damage as a result of failure to follow the instructions.

> Note that even items with a ⚠CAUTION symbol could potentially lead to serious outcomes, depending on the situation. They all indicate important situations, so be sure to observe them.

PROHIBITED Indicates actions that must not be taken.

MANDATORY Indicates actions that must be taken.

⚠WARNING

Precautions on Use

1. Do not use the product in explosive environments. Failure to follow this- may cause injury or fire.
2. Do not work on wiring, maintenance servicing, or inspection with the power on. After turning off the power, wait at least 15 minutes and confirm extinction of CHARGE-LED for the main circuit power supply, and then start working. Failure to follow this may cause electric shock or product damage.
3. Make sure to ground protective grounding terminals of servo amplifiers to equipment or control board. The grounding terminals of servo motors must be connected to protective grounding terminals of servo amplifiers. Failure to follow this may cause electrical shock.
4. Never touch inside of servo amplifiers with hands. Electrical shock may result.
5. Do not damage, apply excessive stresses, put heavy things on, or tuck down cables. Failure to follow this may cause electrical shock.
6. Never touch the rotating part of servo motors during operation. Failure to follow this may cause injury.

⚠CAUTION

Precautions on Use

1. Use servo amplifiers and servo motors in specified combinations. Failure to follow this may cause fire or product malfunctions.
2. Only technically qualified personnel should transport, install, wire, operate, or perform maintenance and inspection on the product. Failure to follow this may cause electric shock, injury, or fire.
3. Never install products in a location exposed to water, in a corrosive or flammable gas atmosphere, or in the vicinity of flammable materials. Failure to follow this may cause fire or product malfunctions.
4. Be careful of the high temperatures generated by the servo amplifier/motor and peripherals. Failure to follow this may cause burns.
5. Never touch regenerative resistors, servo motors, and the servo amplifier's radiation fins as such parts become hot in operation and remain hot for a while after power is turned off. Failure to follow this may cause burns.
6. Designing a safety system that uses the Safe Torque Off function must be done by individuals who have safety standard expertise and have sufficiently understood the descriptions of the Instruction Manual. Failure to follow this may cause injury or product failures.
7. Prior to installation, operation, maintenance servicing or inspection, be sure to read the Instruction Manual and follow the instructions. Failure to follow this may cause electric shock, injury, or fire.
8. Do not use servo amplifiers and servo motors outside their specified operating ranges. Failure to follow this may cause electric shock, injury, or product damage.
9. Consult us for use in high-inertia or high-speed applications that generate high peak regenerative power because these may exceed the capacity of regenerative resistor wires.

Transportation

10. When transporting products, do not hold cables, servo motor shafts, or detector parts. Failure to follow this may cause product damage or injury.
11. Handle products with care during transportation to prevent them from dropping or falling. Failure to do so may cause injury.

Installation

12. Do not stand on products or place heavy objects on top of them. Failure to do so may cause injury.
13. Make sure that the mounting orientation is correct. Failure to follow this may cause fire or product malfunctions.
14. Do not drop products or subject them to excessive shock of any kind. Failure to follow this may cause product failures.
15. Do not obstruct the air intake and exhaust vents. Failure to follow this may cause fire.
16. Follow the Instruction Manual and give sufficient clearance for the wiring of the servo amplifier co ntrol board. Failure to follow this may cause fire or product failures.
17. Unpack product packages right side up. Failure to do so may cause injury.
18. Verify if the product you receive is the product you ordered. Failure to follow this may cause injury or product damage.
19. During installation, be careful that the product does not fall or tip over, as this can be dangerous. Use eyebolts, if included, for transporting servo motors. Failure to do so may cause injury.
20. Install the product to incombustible materials such as metals. Failure to follow this may cause fire.
21. For anti-collision devices, use ones that can sufficiently withstand the maximum output of the system. Failure to do so may cause injury.

Wiring

22. Perform wiring correctly and securely. Failure to do so may cause injury.
23. Perform wiring work according to the wiring diagrams or the Instruction Manual. Failure to follow this may cause electric shock or fire.
24. Perform wiring work according to local standards of electrical installations. Failure to follow this may cause motor burnout or fire.
25. Do not connect commercial power supply to the U, V and W terminals of servo motors. Failure to follow this may cause fire or product malfunctions.
26. Install safety devices such as circuit breakers in case of short-circuiting of external wiring. Failure to follow this may cause fire.
27. Do not bind or band the power cable, input/output signal cable and/or encoder cable together or pass through the same duct or conduit. Failure to follow this may cause faulty operation.
28. When connecting an inductive load such as a relay to the control output signal of the servo amplifier, be sure to connect a surge absorber diode. Be aware that reverse-connecting the diode polarity may cause servo amplifier malfunctions.
29. Do not connect an AC or 90 VDC power supply to the servo motor's 24 VDC brakes. Also, do not connect a 400 VAC power supply to the servo motor's 200 VAC cooling fans. Failure to follow this may cause motor burnout or fire.
30. The surge absorber for the servo motor's holding brake relay prolongs the brake delay time. Therefore, program a sequence taking the delay time into account. Failure to follow this may result in falls or injury.
31. Do not use half-wave rectifier circuits in power supplies of 24 VDC or 90 VDC brakes. Failure to follow this may cause excessive heating or product failures.

Control and Operations

32. Do not perform drastic setting changes as such changes may cause unstable operation. Failure to do so may cause injury.
33. Test-run a servo motor with the motor position fixed and isolated from machine systems. Install the motor to the machine system only after the test is done. Failure to do so may cause injury.
34. The holding brake cannot be used as a dynamic braking, which stops machines for safety. For that purpose, install stop devices. Failure to do so may cause injury.
35. In the case of an alarm, make sure to eliminate the cause and ensure safety before resuming operations. Failure to do so may cause injury.
36. Verify that the input power supply voltage is within the specified range. Failure to follow this may cause product failures.
37. After a power interruption is restored, avoid getting close to stopped machines as it may restart suddenly. (Design a safety system to prepare for such an event.) Failure to do so may cause injury.
38. Do not use servo amplifiers or servo motors that have failed, damaged, or burnt out. Failure to follow this may cause injury or fire.
39. Immediately stop operation in case of anomaly. Failure to follow this may cause electric shock, injury, or fire.
40. When using servo motors in vertical axes, install safety devices to prevent a workpiece from falling even in the event of an alarm. Failure to follow this may cause injury or product damage.

Maintenance and Inspection

41. Parts and components used in servo amplifiers (such as electrolytic capacitors, cooling fans, lithium batteries for encoders, fuses, relays) deteriorate by aging. Considering the standard replacement period, replace these parts and components with new ones for preventive maintenance. Failure to follow this may cause product failures. Contact us when replacing such parts and components.
42. Never touch terminals and connectors while electricity is supplied. Failure to follow this may cause electrical shock.
43. Since the frame of servo amplifiers becomes high in temperature, be careful when conducting maintenance and inspection work. Failure to follow this may cause burns.
44. Contact us for repairs. Disassembling the product by yourself may result in product failures and render it inoperable.

⃠PROHIBITED

Storage

1. Avoid storing products in locations exposed to rain or water drops, or in an environment with hazardous gas or liquid. Failure to follow this may cause malfunctions.

Control and Operations

2. Brakes used in servo motors are holding brakes and must not be used for dynamic braking. Doing so may damage or break the holding brake.
3. Do not apply static electricity or excessively high voltage to servo motor encoder cables. Failure to follow this may cause failures.
4. Never rotate standard servo motors continuously by external force when the amplifier is at Servo OFF state because doing so will heat up the

motor's dynamic braking resistor and may result in accidents. Failure to follow this may cause fire or burns.
5. Never use products with voltages exceeding their specified input voltage range. Failure to follow this may cause component failures or product damage. Failure to follow this may cause product damage or injury.
6. Do not turn power on and off frequently. Turning power on and off more than 30 times a day or 5 times in an hour may cause premature failures of internal components.

Maintenance and Inspection

7. Do not disassemble or repair products by yourself. Failure to follow this may cause fire or electric shock.
8. Do not perform measurements of insulation resistance or dielectric voltage. Failure to follow this may cause product damage.
9. Never plug or unplug connectors while power is on (hot swapping) as the resulting surge voltage may cause electronic component malfunctions. Failure to follow this may cause electric shock or product damage.
10. Do not remove the product name plate.

❗MANDATORY

Storage

1. Store products where they are not exposed to direct sunlight, within the specified temperature and humidity ranges of -20 to +65°C, below 90% RH (non-condensing). Failure to follow this may cause malfunctions.
2. When you use servo amplifiers after a long-term storage (3 years or longer), contact us. The capacitance of electrolytic capacitors can decrease through long-term storage, which may cause malfunctions.
3. When you use servo motors after a long-term storage (3 years or longer), contact us. Checking on bearings and brakes will be needed.

Transportation

4. Follow the instructions written on the package box and avoid excessively stacking boxes. Failure to do so may cause injury.
5. Use the included eyebolts for transporting servo motors. Do not use them for transporting machines in which servo motors are used. Failure to follow this may cause injury or product failures.

Wiring

6. Install an external emergency stop circuit that can stop machinery and cut off power instantly. Also, prepare an external protective circuit to the amplifier to cut off the main circuit power in the event of an alarm. Failure to follow this may cause injury, fire, motor runaway, motor burnout, or secondary damage.

Control and Operations

7. Protection devices are not supplied with servo motors. Prepare an overvoltage protection device, earth leakage breaker, overheat protection device, and emergency stop device to ensure safe operation. Failure to follow this may cause injury or fire.
8. Use products within the specified temperature and humidity ranges.
   For servo amplifiers... Temperature: 0 to 55°C; humidity: 90% RH or less (non-condensing)
   For servo motors... Temperature: 0 to 40°C; humidity: 90% RH or less (non-condensing)
   Failure to follow this may cause burnout or malfunction.

Disposal

9. Dispose of servo amplifiers and servo motors as industrial waste.

Harmonic Suppression Measures Guidelines

Harmonic current generated by equipment such as servo amplifiers can potentially have adverse impact on other power consumers, if it flows out. For this reason, the "Guidelines of Harmonics Reduction for Consumers of High or Ultra-High Voltage Power" (September 1994) was established by Japan Ministry of International Trade and Industry (current Japan Ministry of Economy, Trade and Industry).

Servo amplifiers used by specific power consumers fall in the category of "harmonic wave generating devices" that are subject to these guidelines.
Those power consumers who are subject to these guidelines must determine whether or not any measures for harmonics suppression are required and if so, the measures must be implemented to ensure that the harmonic current emissions are within the limit values stipulated by the contract demand.
Implementation of harmonic suppression measures are recommended to prevent impediments arising from harmonics, even for users not subject to the guidelines.

Our servo amplifiers are equivalent to the circuit classification shown in Table 1 of the "Application Guide for Evaluation of Harmonic Currents Emitted by Consumers of Middle- or High-Voltage Power Supply" .

Refer to the document described below for calculation method of harmonic currents.
"How to Calculate Harmonic Current of Servo Amplifiers for Specific Power Consumers" (JEM-TR225), Japan Electrical Manufacturers' Association

Determine whether or not any harmonics suppression measures are required on the converter (AC-DC converter) side if the servo amplifier has a DC input power supply of DC type.

When countermeasures must be implemented for harmonic suppression of servo amplifiers, connect a harmonic suppression reactor.
Contact us for the harmonic suppression reactor.

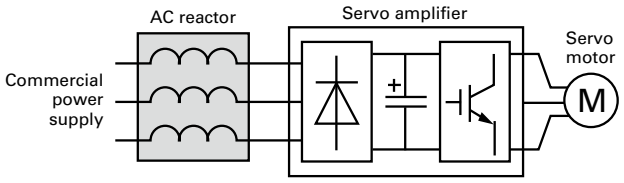

Table 1

Servo amplifier model no.	Power source	Circuit classification	Circuit type			Conversion coefficient Ki
RS3C02 □□ RS3C05 □□ RS3C10 □□ RS3C15 □□ RS3C30 □□ RS3PAC550 (Power supply unit for RS3D80□□)	3-phase	3	3-phase bridge (Capacitor smoothing)	3-1	6-pulse converter with no reactor	K31 = 3.4
				3-2	6-pulse converter with reactor (AC side)	K32 = 1.8

References
• "Guidelines of Harmonics Reduction for Consumers of High or Ultra-High Voltage Power" (September 1994) Japan Ministry of International Trade and Industry (current Japan Ministry of Economy, Trade and Industry)
• "Technical Guidelines for Suppressing Harmonics" (JEAG 9702-2018), The Japan Electric Association
• "Measures for Suppressing Servo Amplifier and General-purpose Inverter Harmonics" (April 2022), Japan Electrical Manufacturers' Association
• "How to Calculate Harmonic Current of Servo Amplifiers for Specific Power Consumers" (JEM-TR225), Japan Electrical Manufacturers' Association
• "Guideline for Suppressing Servo Amplifier (input current 20 A or less) Harmonics" (JEM-TR227) General Incorporated Association The Japan Electrical Manufacturers' Association (JEMA)

MEMO

ECO PRODUCTS

■ ECO PRODUCTS

ECO PRODUCTS are designed to reduce the environmental impacts throughout the product's life cycle. Ranging from design to manufacturing stages, the environmental impact of a product and its packaging materials is assessed against the eco-design requirements.
Those products that satisfy the requirements are accredited as ECO PRODUCTS.

Notes before Purchase

The products in this catalog are designed to be used with general industrial devices.
Always follow the following precautions.

- Read the accompanying Instruction Manual carefully prior to using the product.
- If applying to medical devices and other equipment affecting people's lives, please contact us beforehand and take appropriate safety measures.
- If applying to equipment that can have significant effects on society and the general public, please contact us beforehand.
- Do not use this product in an environment where vibration is present, such as in a moving vehicle or shipping vessel.
- Do not perform any retrofitting, re-engineering, or modification to this equipment.
- The products presented in this catalog are meant to be used for general industrial applications. If using for special applications related to aviation and space, nuclear power, electric power, submarine repeaters, and the like, please contact us beforehand.

EtherCAT® is a registered trademark and patented technology, licensed by Beckhoff Automation GmbH, Germany.

SANYO DENKI CO., LTD. 3-33-1 Minami-Otsuka, Toshima-ku, Tokyo 170-8451, Japan TEL: +81 3 5927 1020 https://www.sanyodenki.com/

The names of companies and/or their products specified in this document are the trade names, and/or trademarks and/or registered trademarks of such respective companies.
San Ace, SANUPS, and SANMOTION are registered trademarks of SANYO DENKI CO., LTD.
Specifications are subject to change without notice.
Product images are for illustrative purposes only. Image fusion processing or computer graphics may be used.

CATALOG No. S1042B007 '26.8